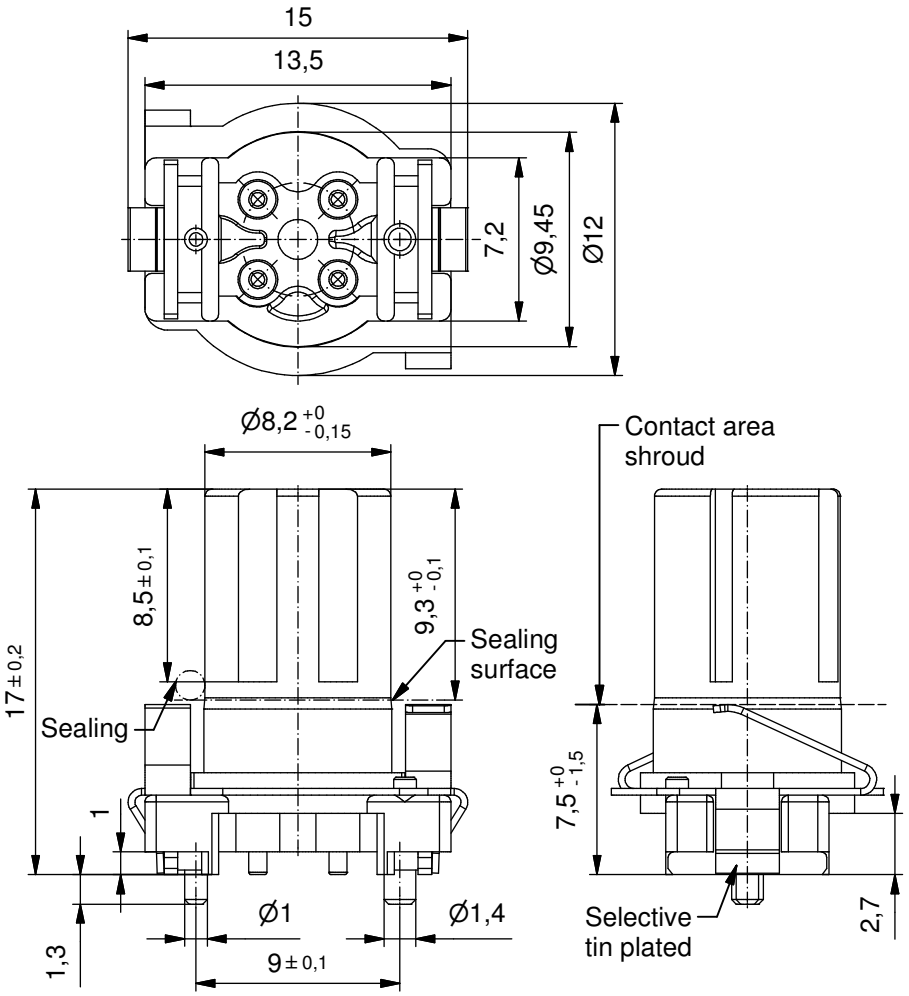

Technical specification:

Rated voltage: IEC 61076-2-101	4pos 250 V
Current rating: IEC 61076-2-101	4pos 4 A at 40°C
Insulation resistance: IEC 60512	>=100 MΩ
Pollution degree: IEC 60664-1	3/2
Degree of protection: IEC 60529	IP 67, in mated condition
Temperature range: EN 60512-11-10 EN 60512-11-4	-25°C ... +95°C -40°C -40°C ... +85°C
Mating cycles: IEC 60512-9a	>=100
Total spring forces shroud: 7,50mm 6,75mm 6,00mm	 <1N 3-4N 8-9N

Materials:

Contact:	CuZn, Ni b / Au 0,2 gal.
Contact carrier:	LCP GF, UL 94 V-0
Soldering sheet:	CuZn, Ni / tin plated
Shroud:	CuZn, Ni / sel. tin plated

Suitable for reflow soldering max. 60s / 250°C

Coplanarity of all contacts, soldering sheets and shroud max 0,1mm

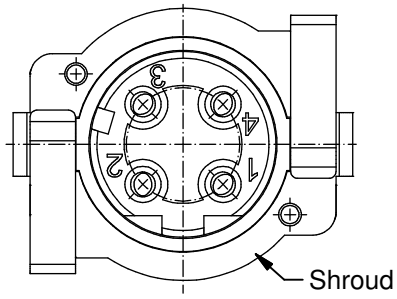

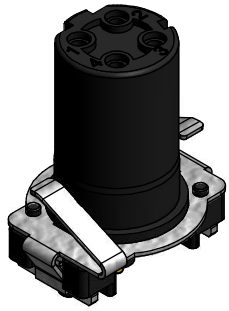

Layout proposal

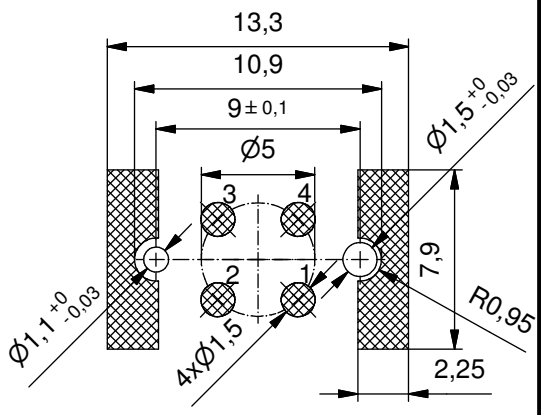

Part no. packing unit Tape & Reel:	Part no. packing unit in bulk:	Description:	Pos
43-02034TR	43-02034	SAL - 12D - IK4 - X9 / SMT	4

DO NOT ALTER CAD DRAWING BY HAND

RoHS & REACH compliant

Index b 30.03.16 brü Ä6042
technical data changed, contact area added & tolerance optimized

dim. in mm

	date	name
drawn	11.09.12	Kniesburges
appd.	11.09.12	Franz

title: Insulating body female M12x1 SMT, d-coding

dwg no: 43K1A1716

part no: see table

general tolerance:

0	± 0,50mm
0,0	± 0,25mm
0,00	± 0,10mm
∡	± 1,5°

THIS DRAWING MAY NOT BE COPIED OR REPRODUCED IN ANY WAY, AND MAY NOT BE PASSED ON TO A THIRD PARTY WITHOUT WRITTEN PERMISSION. OWNERSHIP AND COPYRIGHT OF CONEC GmbH

Downloaded from Arrow.com.