REVISIONS					
REV.	ECN NO.	LOCATION	DESCRIPTION	DATE	DESIGN
A0	N/A		INITIAL RELEASE	/	/
A1	N/A		图面升级整理图面	2025.07.01	阿树

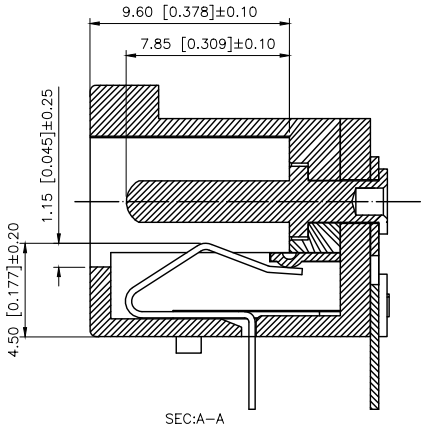

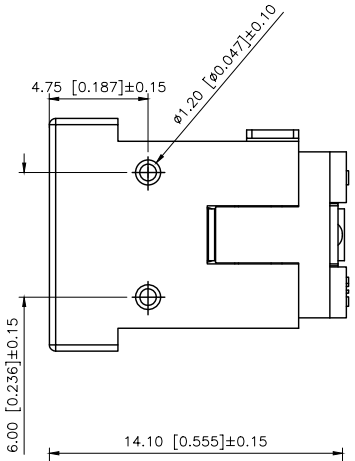

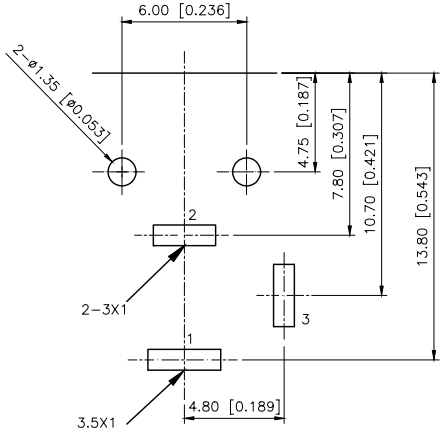

T:1.6 Dimensions of PCB board holes
Tolerance:±0.1(Printed–side view)

Main technical performance
主要技术性能
Rated electric load: DC 20V \ 4.0A
额定电负荷 DC 20V\4.0A
Contact resistance ≤ 30mΩ
接触电阻 ≤30mΩ
Insulation resistance ≥ 100MΩ
绝缘电阻 ≥100MΩ
Operating temperature range: 5–35 ℃
使用温度范围 5–35 ℃
气压 :86kPa 106kPa ~
Air pressure:86kPa ~ 106kPa
相对湿度 :45% 85% ~
Relative humidity:45% ~ 85%

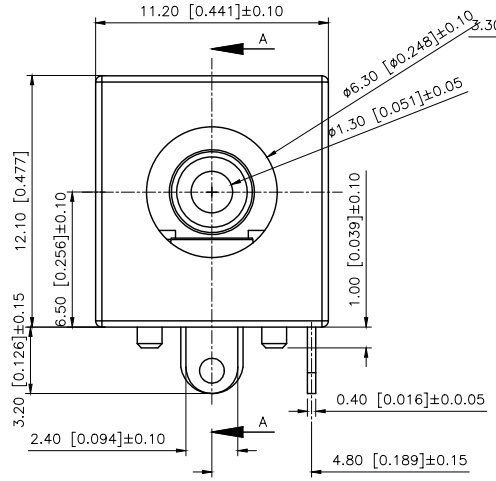

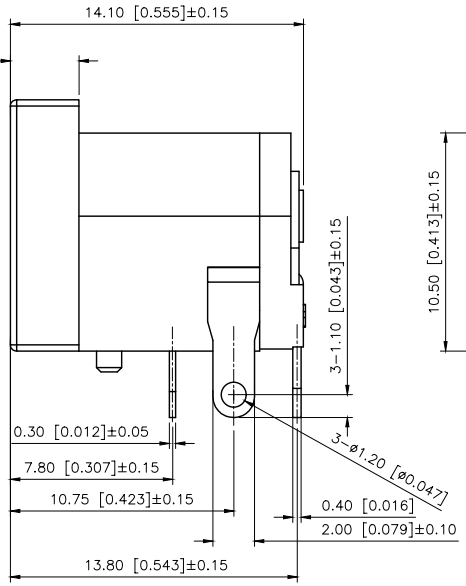

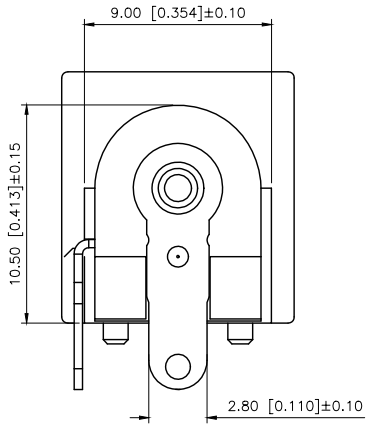

SCHEMATIC	1 3 2
Model	DC–062A–4A
Center Pin	ø1.0mm
	ø1.3mm
	ø1.65mm
	ø2.0mm
	ø2.35mm
	ø2.5mm

LTR	PART NAME	QTY	MATERIAL	REMARK
6	Terminal	1	Brass t=0.4	Cu/Ni/Sn
5	Shunt terminal	1	Brass t=0.4	Cu/Ni/Sn
4	Tip spring	1	Phosphor copper t=0.3	Cu/Ni/Sn
3	Pin	1	Brass	Cu/Ni/Sn
2	Cover	1	PBT	UL 94V–0
1	Housing	1	PBT	UL 94V–0

AuGLAR	±5°
X.	±0.40
X.x	±0.30
X.xx	±0.20
X.xxx	±0.15
UNSPECIFIED TOLERAuCES	

XKB 星邦 Connection

DESIGN	阿树	VIEW:	MODEL TYPE: DC POWER JACK
CHECKED		UNIT: mm/in	PART NO.: DC–062A–4A–2.0
APPROVED		SIZE: A4	DWG NO.: DC–062A–4A–2.0

XKB INDUSTRIAL PRECISION CO.,LIMITED

SCALE	PAGE	REVISION
N/A	1/1	A1

www.helloxkb.com www.helloxkb.cn www.xk–dg.cn