REVISIONS					
REV.	ECN NO.	LOCATION	DESCRIPTION	DATE	DESIGN
A1	N/A			2025.06.28	
A2	N/A	A2 X5		2025.11.25	

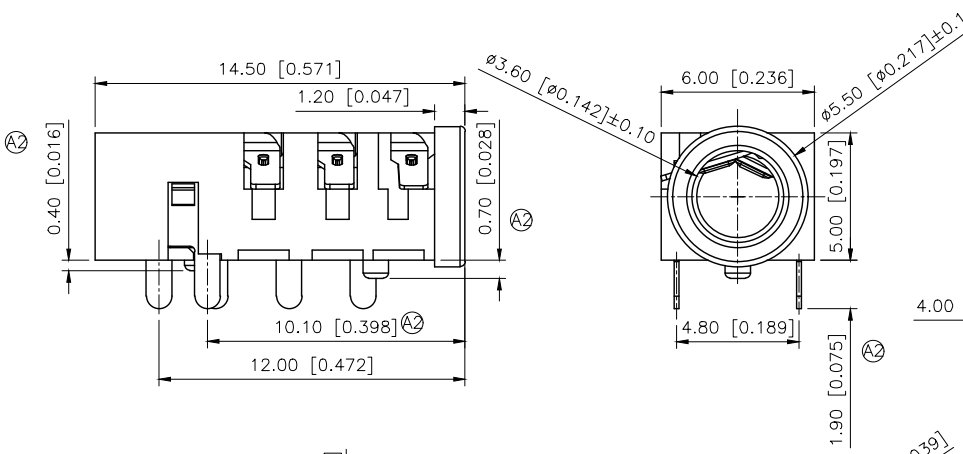

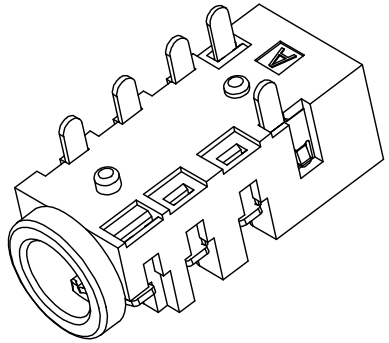

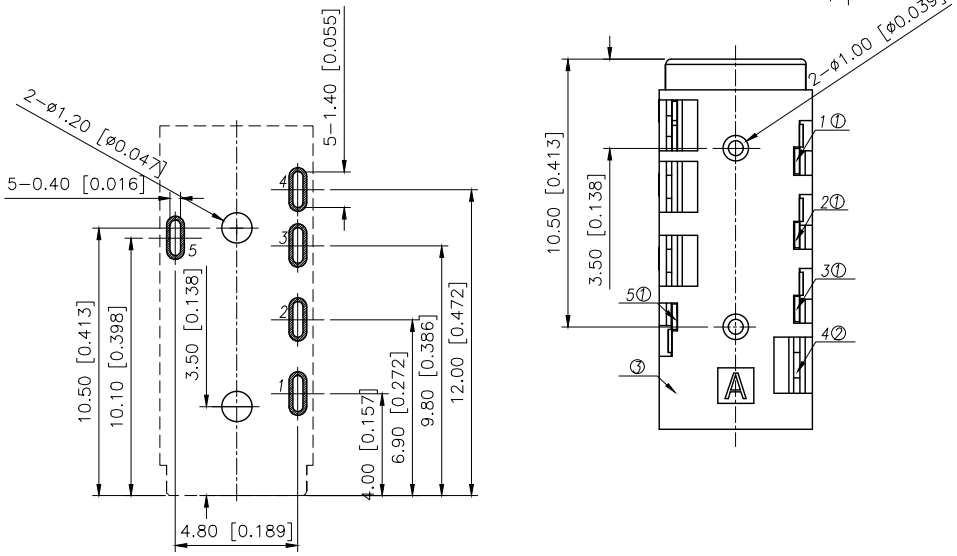

T:1.6 DIMENSIONS OF DC BOARD HOLES
TOLERANCES:±0.10(PRINTED-TOP VIEW)

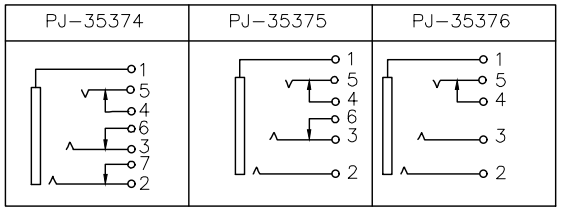

SPECIFICATION
1.Rating DC 20V 1A
2.Contact resistance ≤30Ω
3.Insulation resistance ≥100MΩ (DC250V)
4.Withstand voltage 500VAC
5.Insertion and extraction force 3-20N;
6.life test 5,000 cycles

Plastic	PA9T	Black
Terminal 8	Phosphor Bronze	Gold
Terminal 7	Phosphor Bronze	Gold
Terminal 6	Phosphor Bronze	Gold
Terminal 5	Phosphor Bronze	Gold
Terminal 4	Phosphor Bronze	Gold
Terminal 3	Phosphor Bronze	Gold
Terminal 2	Phosphor Bronze	Gold
Terminal 1	Phosphor Bronze	Gold
PAPT NAMF	MATERIAL	PLATING

AuGLAR	±5°
X.	±0.40
X.x	±0.30
X.xx	±0.20
X.xxx	±0.15
UNSPECIFIED TOLERAuCES	

XKB Connection 星创

DESIGN		VIEW:	MODEL TYPE: 3.5 PHONE JACK
CHECKED		UNIT: mm/in	PART NO.: PJ-35375
APPROVED		SIZE: A4	DWG NO.:

XKB INDUSTRIAL PRECISION CO.,LIMITED

SCALE	PAGE	REVISION
N/A	1/2	A2