REVISIONS					
REV.	ECN NO.	LOCATION	DESCRIPTION	DATE	DESIGN
A0	N/A		INITIAL RELEASE	/	/
A1	N/A		图面升级整理图面	2025.06.24	阿树

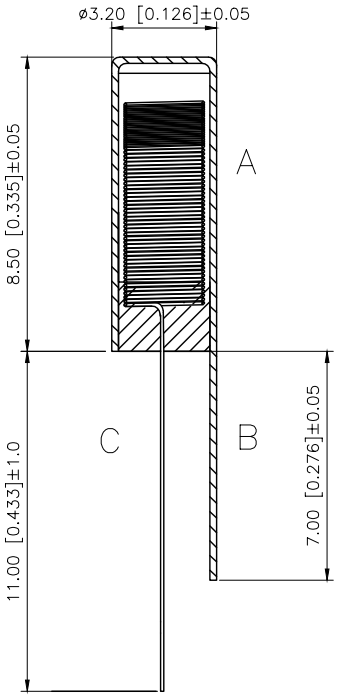

Voltage: < 12V
Current: < 20mA
Conduction time: 2ms
Closed circuit resistance: < 30m ohm
Open circuit resistance: > 10m ohm
High temperature resistance:240 degrees
Terminal tension: 500gf / min
Humidity: 95RH 40 degrees 96 hours
Operating life: 200,000 times

Product features:
XKB 产品特性：
1.SW-58010P is a sealed non-directional vibration induction starting switch, which can be triggered at any Angle.
1.SW-58010P为密封型无方向性振动感应出发开关，任何角度均可触发
2. This series of switches in the static world is open circuit OFF state, when the external force to touch the corresponding vibration force, or moving speed to adapt to (partial) centrifugal force, conductive pin will produce instantaneous conduction and show ON state; When the external force disappears, the switch reverts to the open OFF state.
2.本系列开关在静止世为开路OFF状态，当受到外力碰触而达到相应振动力时，或者移动速度达到适应（偏）离心力时，导电接脚会产生瞬间导通而呈ON状态；当外力消失时，开关恢复为开路OFF状态。
3. This series switch with P model, sealed package.
3.本系列开关带P型号，为密封式封装。
4. This series of switch trigger sensitivity is high.
4.本系列开关触发灵敏度高。
5. This series of switches can reach 200000 times in normal service life.
5.本系列开关在正常使用寿命可以达到200000次。
6. This series of switches are suitable for burglar alarm, electronic scale, mobile power supply, toys and other sensor type electronic products. XKB
6.本系列开关适用于，防盗报警器，电子秤，移动电源，玩具等系列传感类型电子产品。

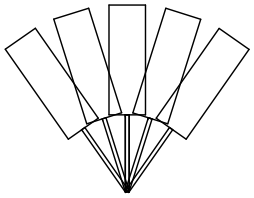

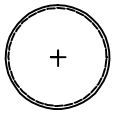

ITEM	PAPT NAMF	QTY	MATERIAL	FINISHING
⑤	Coat the brass	1	Brass	NICKE
④	sealing rubber	1	Rohs epoxy resin	
③	Spring C	1	SUS	ø0.10
②	Tube body B	1	Brass	Silver
①	Outer copper sleeve A	1	Brass	Gold plating

AuGLAR	±5°
X.	±0.40
X.x	±0.30
X.xx	±0.20
X.xxx	±0.15
UNSPECIFIED TOLERAuCES	

XKB 星坤 Connection

DESIGN	阿树	VIEW:	MODEL TYPE: Vibration switch
CHECKED		UNIT: mm/in	PART NO.: SW-58010PZDG-7A11S1
APPROVED		SIZE: A4	DWG NO.: X-SW-58010PZDG-7A11S1

XKB INDUSTRIAL PRECISION CO.,LIMITED

SCALE	PAGE	REVISION
N/A	1/1	A1

www.helloxkb.com www.helloxkb.cn www.xk-dg.cn