RoHS 2.0

REV.	ECN NO.	DESCRIPTION	DATE	DESIGN

PIN NUMBER	SIGNAL NAME
PIN 1	Vbus
PIN 2	D-
PIN 3	D+
PIN 4	GND
PIN 5	StdA_SSRX-
PIN 6	StdA_SSRX+
PIN 7	GND_DRAIN
PIN 8	StdA_SSTX-
PIN 9	StdA_SSTX+
SHELL	GND

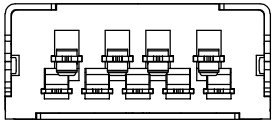

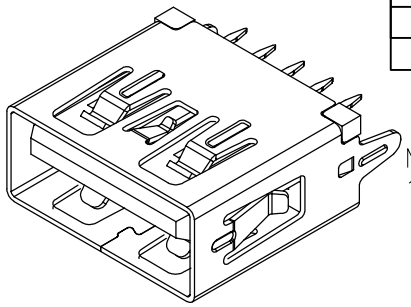

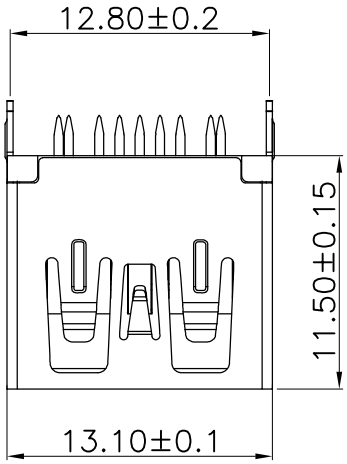

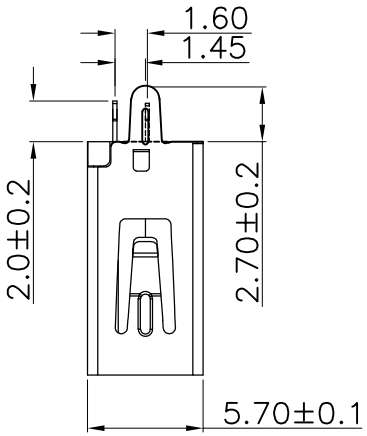

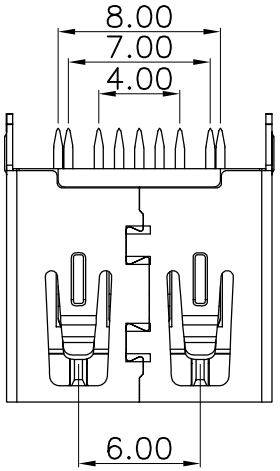

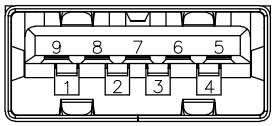

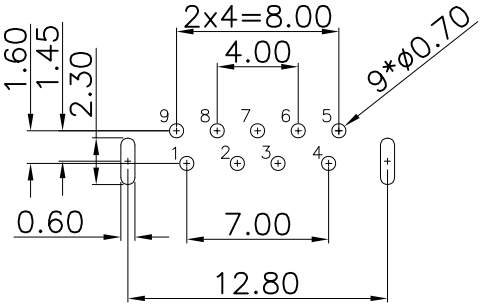

RECOMMENDER P.C.B.LAYOUT TOP VIEW
(COMPONENT SIDE TOLERANCE±0.05)

NOTES:

1. MATERIAL:
   1.1.HOUSING: LCP ,COLOR IS BLUE,HIGH TEMPERATURE PLASTIC;
   1.2.CONTACT: BRASS (H65 T=0.20&0.25mm);
   1.3.SHELL: COLD ROLLED IRON (SPCC T=0.30mm);
2. ELECTRICAL:
   4.1. VOLTAGE RATING: 30V DC ;
   4.2. CURRENT RATING: 1.5A ;
   4.3. CONTACT RESISTANCE: 30MILLIOHMS MAX.;
   4.4. WITHSTAND VOLTAGE: 100 VAC RMS 50(60)Hz,1MIN.;
   4.5. INSULATION RESISTANCE: 100MEGOHMS MIN @500V DC;
5. MECHANICAL:
   5.1. MATING FORCE: 35N MAX.;
   5.2. UNMATING FORCE: 5~35N ;
   5.3. OPERATING LIFE: 1500 CYCLES MIN.;
6. PLATING:
   6.1. TERMINAL:
      NI PLATING OVER ALL,
      Tin PLATING ON SOLDER AREA,
      Au 1U" ON CONTACT AREA;
   6.2.SHELL: NI PLATING OVER ALL;
7. ENVIRONMENTAL:
   7.1. STORAGE TEMPERATURE RANGE: -40°C~+85°C;
   7.2. OPERATION TEMPERATURE RANGE: -25°C~+70°C;
8.SALT SPRAY TEST:24H(EXCLUDING RIVETED BENDS)

序号	品 名	材 质	电镀/颜色	备 注
C	外壳	SPCC	镀镍	
B	端子	黄铜H65	焊料区镀锡 接触区镀金	
A	基座	LCP	蓝色	

深圳市富港科技有限公司

UNLESS OTHERWISE, GENERAL TOLERANCE:
X.xxx ±0.10
X.xx ±0.20
X.x ±0.30

ANGULAR:
X.xx° ±1°
X.x° ±3°
X.° ±5°

NAME: 3.0 A母180° L11.5平口直脚

P/N:

DWG NO: FG-ST-003-L11.4ZJ-Z

THIRD ANGLE PROJECTION

UNIT:	SCALE	SIZE:	SHEET:	REV.
MM	1:1	A4	1/1	A1

DRAWN: Q S X

CHECKED:

APPROVED: