1 Features

- Meets IEEE 802.3 and ANSIX3.263 standards .RoHS Compliant
- Less magnetic components to be placed on PCB,higher reliability and yields
- Minimize PCB space and Simplify PCB Layout
- Cable interface for isolation and low common mode emissions.
- Storage temperature range: -40℃ to +85℃
- Operating temperature range: 0℃ to +70℃

2 Specifications(特性参数)

Part No	OCL(uH min) @100KHz/0.1Vrms 8MA BIA	Turns Ratio(3%)		DCR (Ω) Max	Cww(Pri:Sec) pF Typ		Isolation Voltage(AC Vrms 3S)
H1159A07A-GY	350UH	1:1		1.2	35		1500V
Part No	InsertionLoss(dB Max) 1-100MHz	Return Loss(dB Min) @MHz			CMRR(dB min)MHz		Crosstalk (dB min)MHz
		1-30	40~60	60~100	1-60	60~100	1~100
H1159A07A-GY	-1.2	-18	-16	-14	-40	-30	-35

3 Mechanical(外观尺寸图)



(Top View)

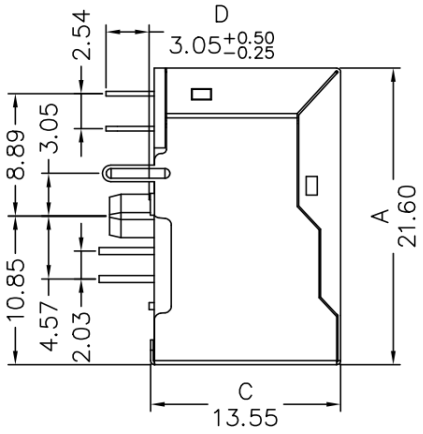

(Side View)

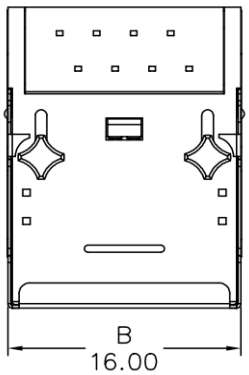

(Bottom View)

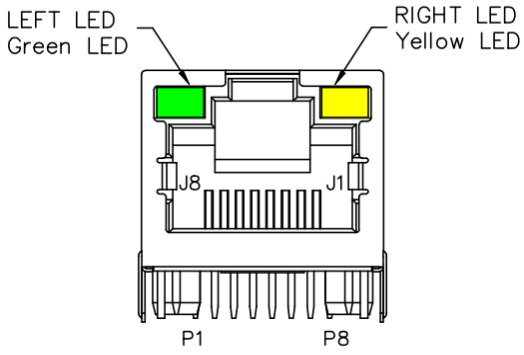

(Front View)

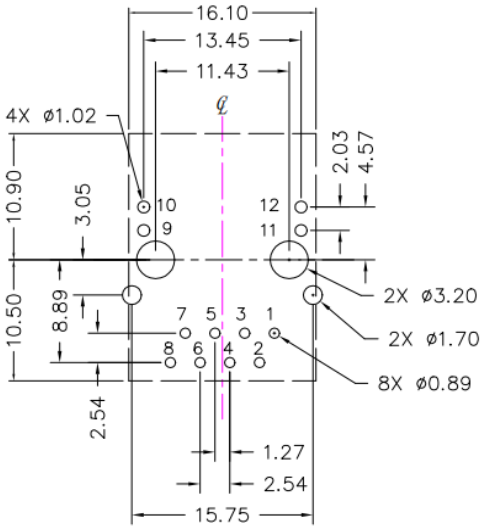

Recommended PCB layout (Component Side View)

All dimension tolerance are ±0.08 unless otherwise specified

Dimensions in MM
Unless otherwise specified,Tolerancd:.XX ±0.25

石门盈盛电子科技有限公司 http://www.hqs-t.com/ TEL：0755-21083343 18673625585
Shimen Yingsheng Electronic Technology Co., Ltd https://hqst01.taobao.com E-mail: hqst008@163.com

4 Schematic（原理图）

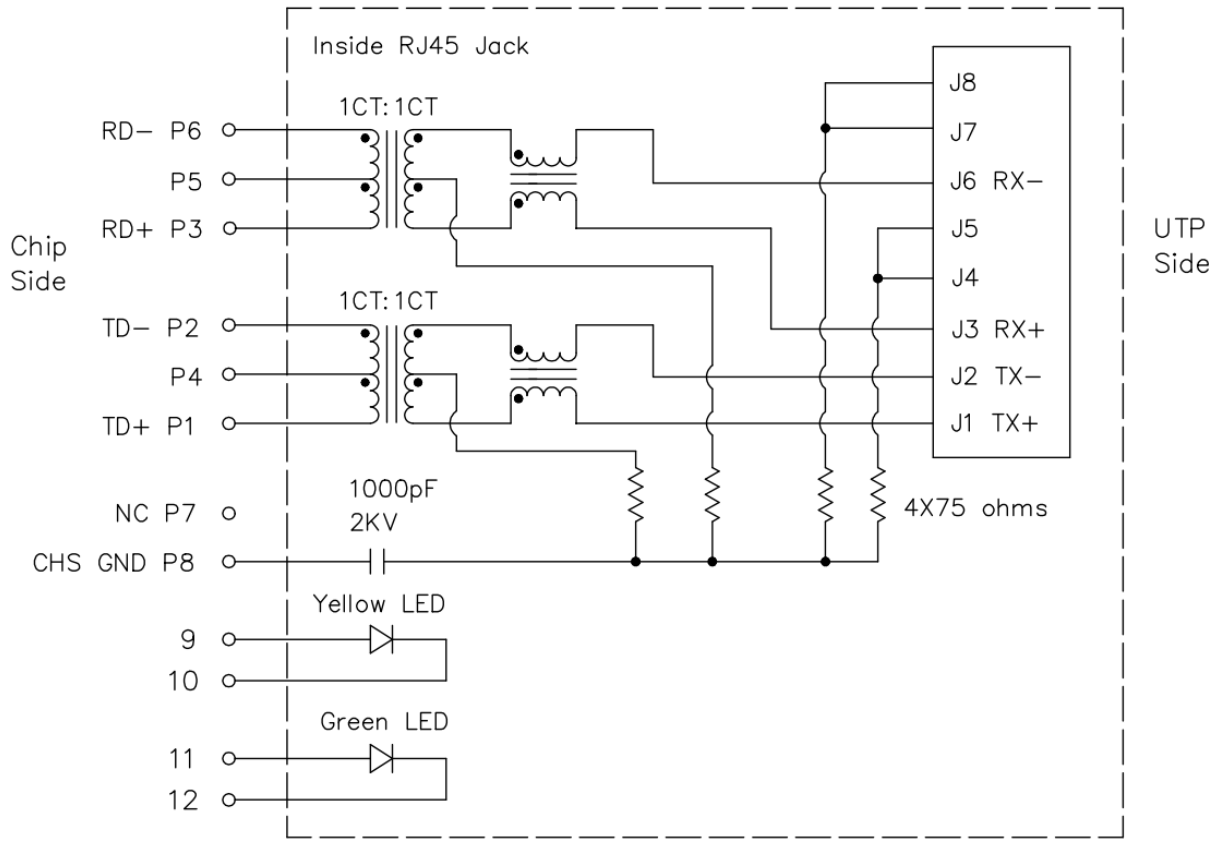

Notes: Connect CHS GND to PCB Ground

REV:A/2

1.Connector Material:
Housing:Thermoplastic UL94 V-0
Contact/Shield:Cooper alloy
Shield Plating:Nickel
Contact Plating:Selective gold 6u″
2.Tolerances comply with F.C.C dimension requirements
3.Durability:800 mating Min

石门盈盛电子科技有限公司 http://www.hqs-t.com/ TEL：0755-21083343 18673625585
Shimen Yingsheng Electronic Technology Co., Ltd https://hqst01.taobao.com E-mail: hqst008@163.com