REVISIONS					
REV.	ECN NO.	LOCATION	DESCRIPTION	DATE	DESIGN
A1	N/A		尺寸修正，图面升级整理图面	2024.8.30	阿树
A2	N/A		独立各PIN数图纸，增加开孔定位尺寸	2024.12.10	阿树

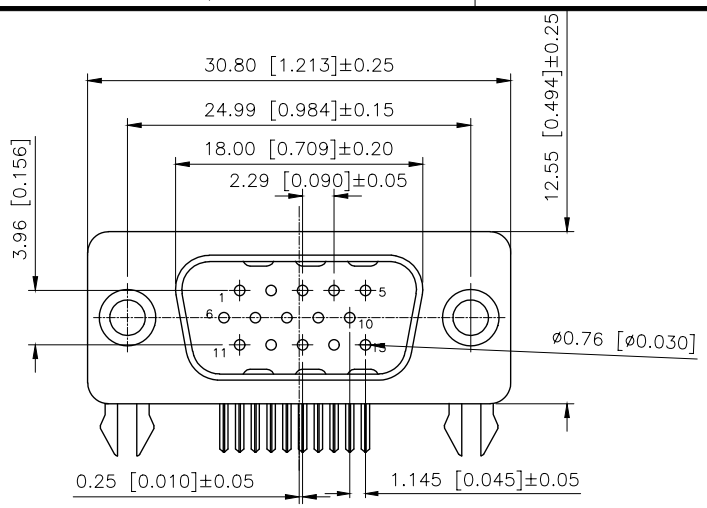

PART NO.:

X06 15 W T 7 B 2
① ② ③ ④ ⑤ ⑥ ⑦

①Series NO.
②Row No.Pin No:15PIN
③Welding Board Angle :W-Male
④T:Tradutional
⑤Planting Categotry:
1:1U' ;2:2U' ;3:3U' ;4:5U' ;5:15U' 6:30U' ;7:AuSn
⑥B:Black W:White BL:Blue Y:Yellow G:Green R:Red
⑦1:TYPE-1; 2:TYPE-2; 3:TYPE-3; 6:TYPE-6

Specifications:
规格：
1.Voltage rating:250VAC/DC
额定电压：250V AC/DC
2.Current rating:3A AC/DC
额定电流：3A AC/DC
3.Withstanding voltage:500V AC/minute
耐受电压：≥500V AC/分钟
4.Temperature range: -55℃-+105℃
温度范围：-55℃-+105℃
5.Insulation resistance:1000MΩMIN
绝缘电阻：≥1000MΩ
6.Contact resistance:30mΩMax
接触电阻：≥30mΩ
7.Materiai :
材料和成本:
8.INSULATOR:PBT UL 94V-0
绝缘体：PBT UL 94V-0
9.SHELL:SPCC-SD Plated Ni /Au/Sn
外壳：铁合金 镀镍、金、锡
10.CONTACT MATERIAL:Copper Alloy
触点材料：铜合金

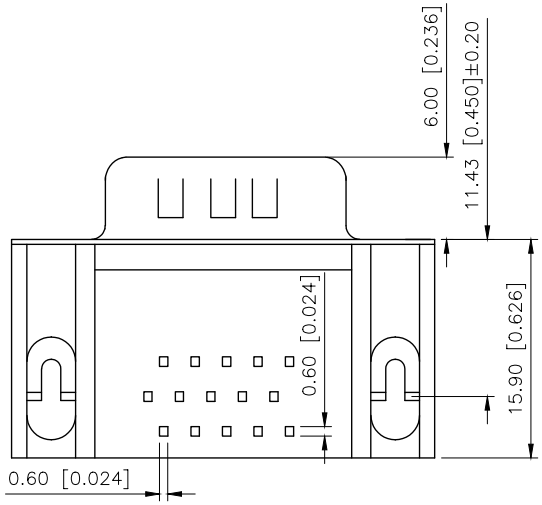

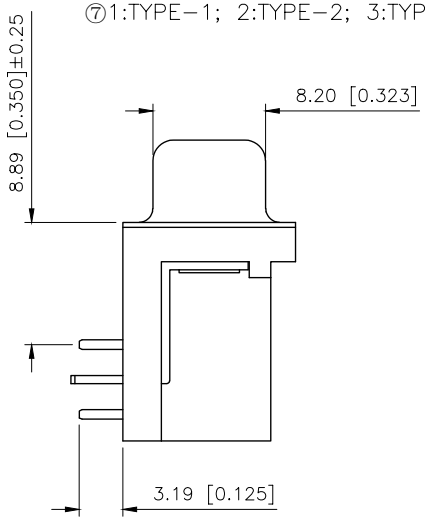

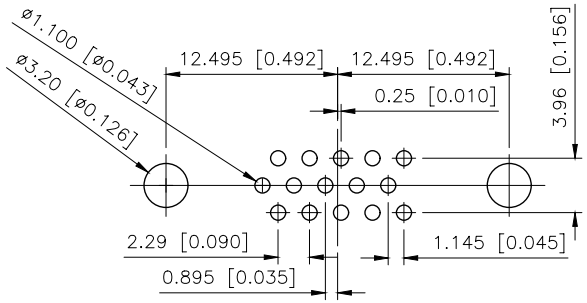

PCB LAYOUT

铆合方式	TYPE-1:铆合	TYPE-6:直铆锁	TYPE-3:叉锁	TYPE-2:铆合锁螺丝
图式	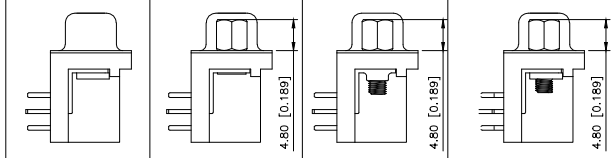			

AuGLAR	±5°
X.	±0.40
X.x	±0.30
X.xx	±0.20
X.xxx	±0.15
UNSPECIFIED TOLERAuCES	

XKB 星创 Connection

XKB INDUSTRIAL PRECISION CO.,LIMITED

DESIGN	阿树	VIEW:	MODEL TYPE: D-SUB
CHECKED		UNIT: mm/in	PART NO.: X0615WT7B2
APPROVED		SIZE: A4	DWG NO.: X-X0615WT7B2
			SCALE N/A / PAGE 1/1 / REVISION A2

www.helloxkb.com www.helloxkb.cn www.xk-dg.cn