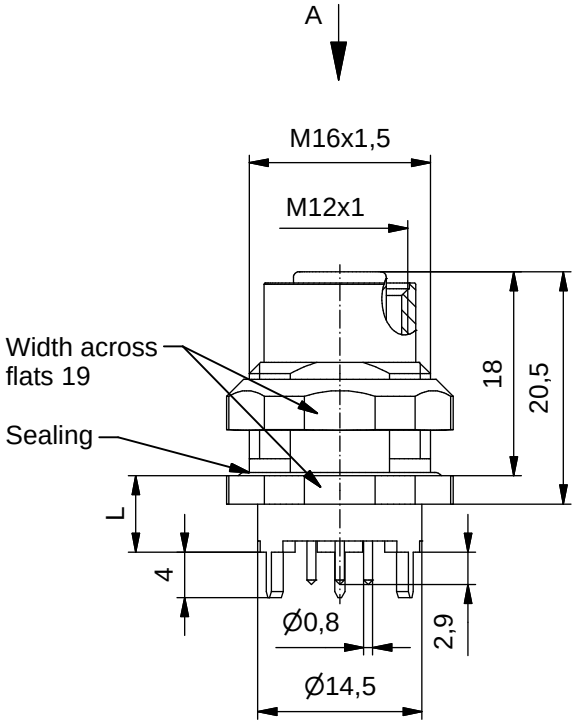

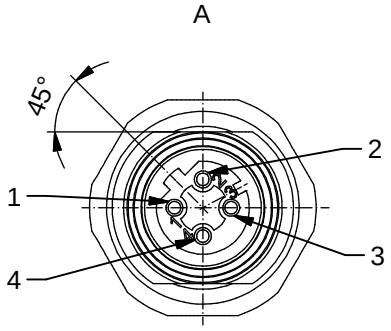

Technical specification:

Rated voltage: IEC 61076-2-101	250 V
Current rating: IEC 61076-2-101	4 A at 40℃
Insulation resistance: IEC 60512	>=100 MΩ
Pollution degree: IEC 60664-1	3/2
Degree of protection: IEC 60529	IP 67, in mated condition
Temperature range:	-30℃ ... +85℃
Mating cycles: IEC 60512-9a	>=100

Materials:

Contact:	CuZn
Contact plating:	Nickel, gold plated
Contact carrier:	PBT GF, UL 94
Sealing connector: chassis:	FPM NBR
Counternut:	CuZn, nickel plated
Socket housing:	CuZn, nickel plated
Grouting:	Polyurethane-resin, UL 94

Installation specification:

Recommended torque:	1-1,2 Nm
Conec installation tool:	Torque wrench: 36-000200 Insert across flats 19: 36-000250

Pin layout PCB

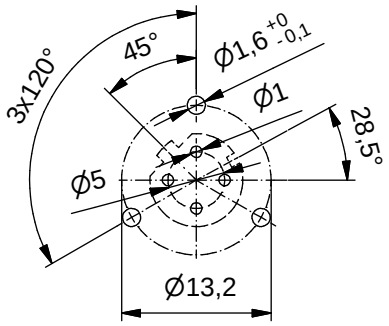

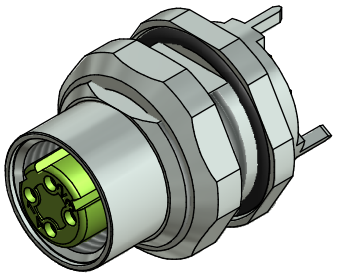

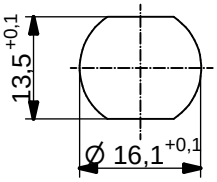

Minimum wall thickness 1,5mm, alternativ panel cut-out d=16,1

Part no:	Description:	Pos	Length L:
43-01690	SAL - 12D - FKH4 - P6,75	4	6,75mm

DO NOT ALTER CAD DRAWING BY HAND

Directive 2002/95/EC RoHS compliant

Index: a 02.01.13 MG Ä4555
Data sheet revised, technical specification changed, materials corrected

dim. in mm

	date	name
drawn	29.09.10	Franz
appd.	21.09.10	Schmidt

general tolerance: 0 ± 0,50mm; 0,0 ± 0,25mm; 0,00 ± 0,10mm

title: Female socket M12x1 with dip solder shielded, backmounting, Industrial Ethernet

dwg no: 43K1A1198

part no: see table

THIS DRAWING MAY NOT BE COPIED OR REPRODUCED IN ANY WAY, AND MAY NOT BE PASSED ON TO A THIRD PARTY WITHOUT WRITTEN PERMISSION. OWNERSHIP AND COPYRIGHT OF CONEC GmbH

Downloaded from Arrow.com.