REVISIONS					
REV.	ECN NO.	LOCATION	DESCRIPTION	DATE	DESIGN
A0	N/A		INITIAL RELEASE	/	/
A1	N/A		图面升级整理图面	2025.06.30	阿树

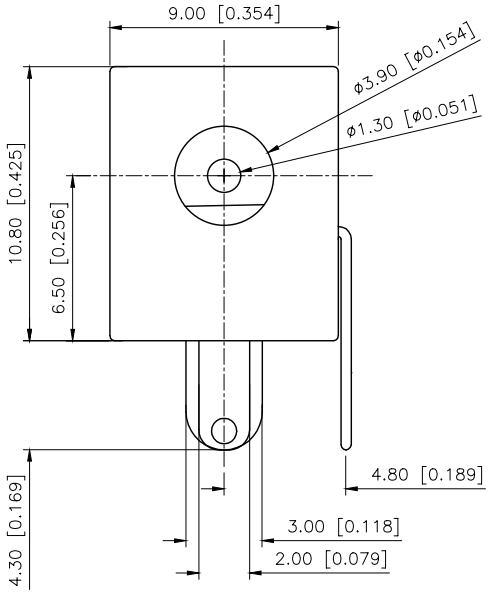

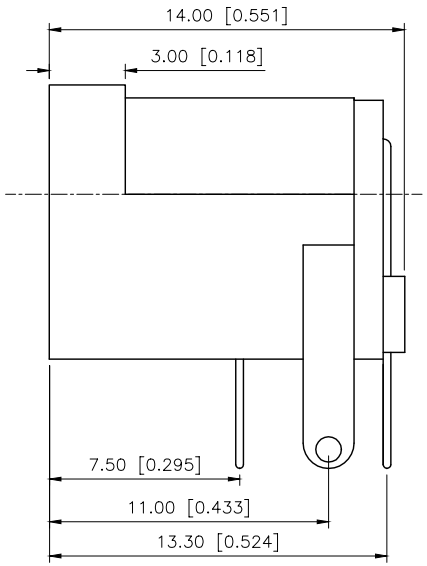

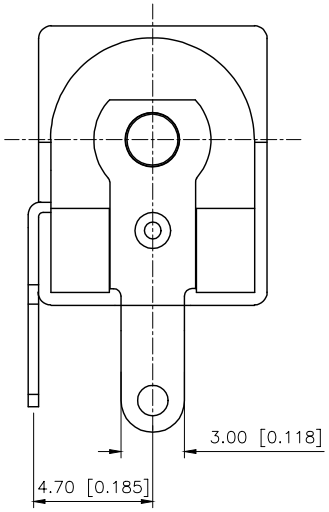

Specifications:
规格：
1.Voltage rating:20VAC/DC
额定电压：20V AC/DC
2.Current rating:3A AC/DC
额定电流：3A AC/DC
3.Withstanding voltage:500V AC/minute
耐受电压：500V AC/分钟
4.Temperature range: −25℃−+85℃
温度范围：−25℃−+85℃
5.Insulation resistance:100MΩ MIN
绝缘电阻：100MΩ MIN
6.Contact resistance:50mΩ Max
接触电阻：50mΩ Max

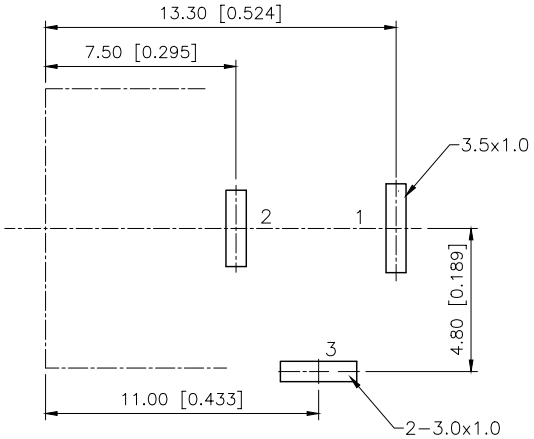

PCB LAYOUT TOP VIEW

SCHEMATIC	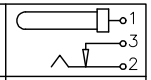
Model	DC−005C−2A
Center Pin	Ø1.3 mm

Plastic	PBT	
Terminal 3	Brass	TIN
Terminal 2	Phosphor Bronze	TIN
Terminal 1	Brass	TIN
Center pin	Brass	TIN
PAPT NAMF	MATERIAL	PLATING

AuGLAR	±5°
X.	±0.40
X.x	±0.30
X.xx	±0.20
X.xxx	±0.15
UNSPECIFIED TOLERAuCES	

XKB 星科 Connection

DESIGN	阿树	VIEW:	MODEL TYPE: DC POWER JACK
CHECKED		UNIT: mm/in	PART NO.: DC−005C−2A−1.3
APPROVED		SIZE: A4	DWG NO.: DC−005C−2A−1.3

XKB INDUSTRIAL PRECISION CO.,LIMITED

SCALE	PAGE	REVISION
N/A	1/1	A1

www.helloxkb.com www.helloxkb.cn www.xk−dg.cn