REVISIONS					
REV.	ECN NO.	LOCATION	DESCRIPTION	DATE	DESIGN
A0	N/A		INITIAL RELEASE	/	/
A1	N/A		图面升级整理图面	2025.06.24	阿树

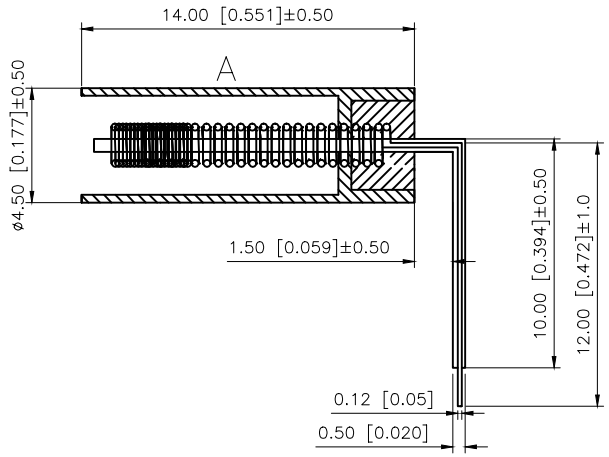

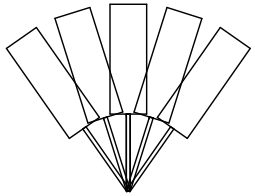

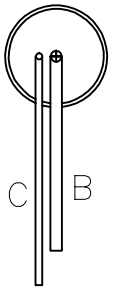

Voltage: < 12V
Current: < 20mA
Conduction time: 2ms
Closed circuit resistance: < 30m ohm
Open circuit resistance: > 10m ohm
High temperature resistance:120 degrees
Terminal tension: 500gf / min
Humidity: 95RH 40 degrees 96 hours
Operating life: 200,000 times

XKB Product features:
产品特性：
1. Sw-18010 is a spring type non directional vibration inductive trigger switch, which can be triggered at any angle.XKB
1.SW-18010为弹簧型无方向性振动感应触发开关，任何角度均可触发。
2. This series of switches are in open circuit off state when they are at rest. When they are touched by external force and reach the corresponding vibration force, or when the moving speed reaches the appropriate (eccentric) centrifugal force, the conductive contact feet will produce instantaneous conduction and present on state. When the external force disappears, the switch will return to open circuit off state.
2.本系列开关在静止时为开路OFF状态，当受到外力碰触而达到相应震动力时，或移动速度达到适当（偏）离心力时，导电接触脚会产生瞬间导通而呈ON状态，当外力消失时，开关恢复为开路OFF状态。
3. This series of switches with model P are completely sealed.XKB
3.本系列开关带P型号的，为完全密封式封装。
4. The trigger sensitivity of this series of switches is very high, which can be divided into three different levels of sensitivity.XKB
4.本系列开关触发灵敏度很高，可分三种不同等级灵敏度。
5. The service life of this series of switches can reach 200000 times under normal use.
5.本系列开关在正常使用情况下寿命可达200,000次。
6. This series of switches are suitable for triggering small current circuit.
6.本系列开关适用于小电流电路的触发。
7. All materials of this series of switches are made of environmental protection RoHS materials.XKB
7.本系列开关所有材质均采用环保ROHS材质制造。

ITEM	PAPT NAMF	QTY	MATERIAL	FINISHING
④	Sealing glue	1	ROSH epoxy resin	
③	Spring C	1	Phosphor copper	0.10
②	Pin B	1	Brass	Gold plating
①	Tube body A	1	PC	Black

AuGLAR	±5°
X.	±0.40
X.x	±0.30
X.xx	±0.20
X.xxx	±0.15
UNSPECIFIED TOLERAuCES	

XKB 星坤 Connection

DESIGN	阿树	VIEW:	MODEL TYPE: Vibration switch
CHECKED		UNIT: mm/in	PART NO.: SW-18110W-10G12B1
APPROVED		SIZE: A4	DWG NO.: X-SW-18110W-10G12B1

XKB INDUSTRIAL PRECISION CO.,LIMITED

SCALE	PAGE	REVISION
N/A	1/1	A1

www.helloxkb.com www.helloxkb.cn www.xk-dg.cn