REVISIONS					
REV.	ECN NO.	LOCATION	DESCRIPTION	DATE	DESIGN
A0	N/A		INITIAL RELEASE	/	/
A1	N/A		图面升级整理图面	2025.05.19	阿树

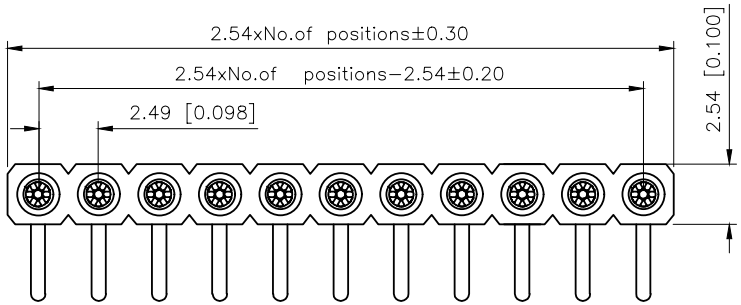

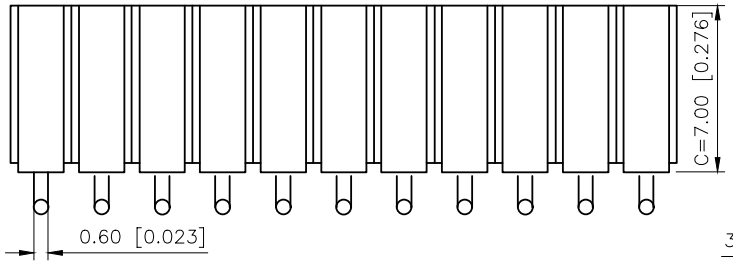

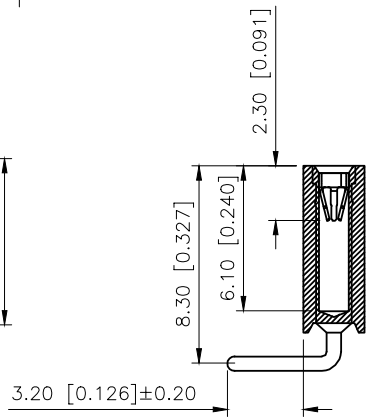

Technical Date
Pin(outer sleeve):Brass,machined CuZn38pb2
Clip (Contact 6 Finger):Beryllium copper,heat teated
Insulator:PPS UL94V−0 colour:black
Current rating:3Amps
Mating Pinø:0.635/0.889mm
Forces:(polished steel gaugeø0.66mm)
−Insertion:1.2N typ
−Withdrawal:0.6N typ
Mechanical Life:min 500 cycles
Contact resistance: 10mΩ max
Dielectric strength:1000V
Operaling temperature:−40 ℃ to +105℃
Soldering temperature:+255℃

PART NO.:

X5511 F R−16−C70 D32−8300
① ② ③ ④ ⑤ ⑥ ⑦

①Series No
②Category:F−Female
③Welding Board Angle:R−Stright 90°
④Row No−Pin No:XX−01P−XXP
⑤Pin Length :C=7.0mm
⑥Pin Length :D=3.2mm
⑦8300:Type8300

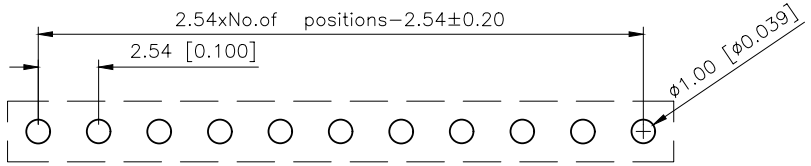

Recommended P.C.B Layout(±0.05)

X5511FR−XX−C70D32−8300	PPS 94V−0	Brass	Tin Gold 1u''	X5511F
PART NO	Material	Material(Pin)	Finish(Terminal)	Mates With XKB Pin Header

AuGLAR	±5°
X.	±0.40
X.x	±0.30
X.xx	±0.20
X.xxx	±0.15
UNSPECIFIED TOLERAuCES	

XKB Connection 星创

DESIGN	阿树	VIEW:	MODEL TYPE: 2.54mm BTB Style Connector
CHECKED		UNIT: mm/in	PART NO.: X5511FR−16−C70D32−8300
APPROVED		SIZE: A4	DWG NO.: X−X5511FR−16−C70D32−8300

XKB INDUSTRIAL PRECISION CO.,LIMITED

SCALE	PAGE	REVISION
N/A	1/1	A1

www.helloxkb.com www.helloxkb.cn www.xk−dg.cn