REVISIONS					
REV.	ECN NO.	LOCATION	DESCRIPTION	DATE	DESIGN
A0	N/A		INITIAL RELEASE	/	/
A1	N/A		图面升级整理图面	2025.07.01	阿树

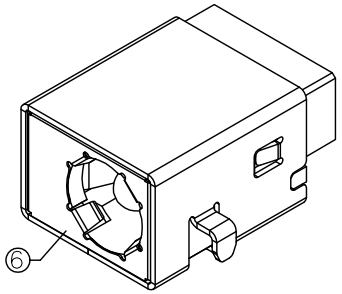

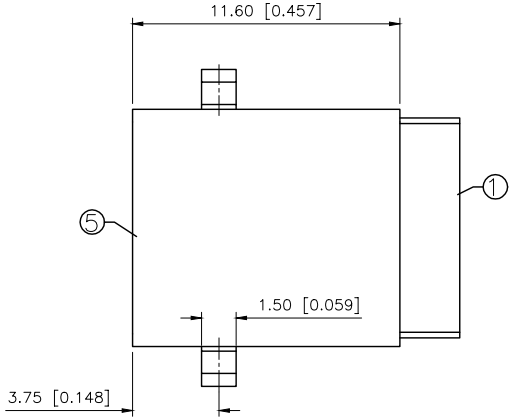

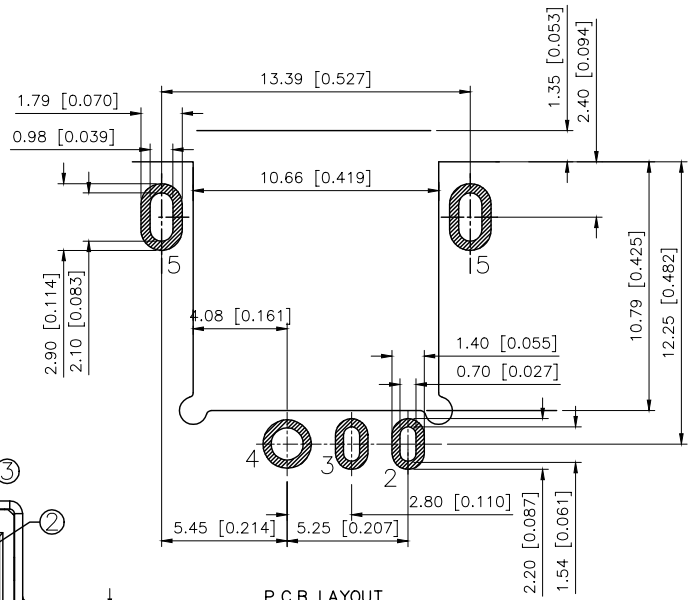

P.C.B LAYOUT
TOP VIEW

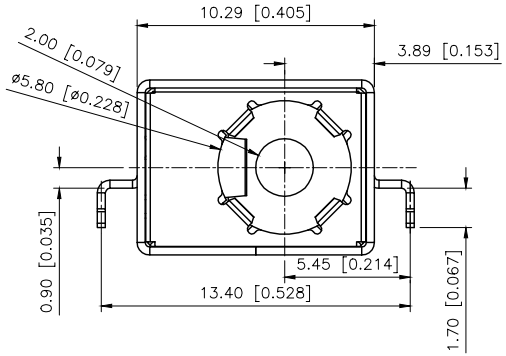

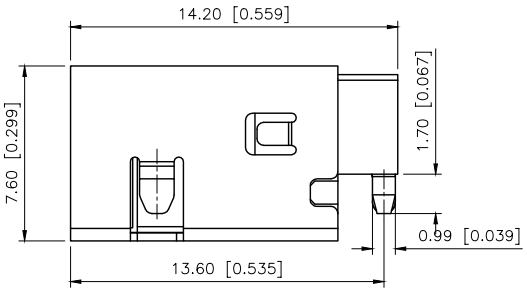

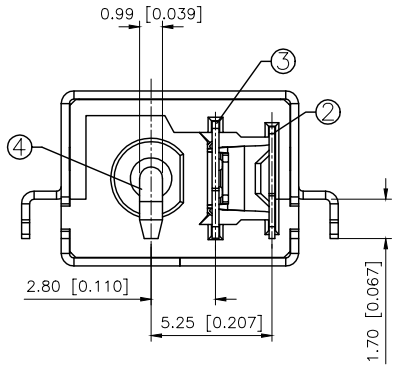

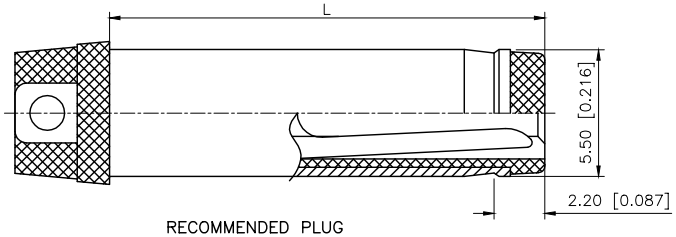

RECOMMENDED PLUG

SPECIFICATION
1.Rating :DC 20V 5.5A;
2.Contact resistance:<30mΩ;
3.Insulation resistance:2100MΩ (DC250V);
4.Withstand voltage:500VAC
5.Insertion and extraction force:3–30N;
6.life test:5.000 cycles.

SCHEMATIC	4 / 3 / 2
Model	DC–C033D–5.5A
Center Pin	Ø2.0 mm
	Ø2.5 mm

Terminal 5	Brass	TIN
Terminal 4	Brass	TIN
Terminal 3	Brass	TIN
Terminal 2	Phosphor Bronze	TIN
Center pin	Brass	TIN
Coat	SUS	
Plastic	PA9T	
PAPT NAMF	MATERIAL	PLATING

AuGLAR	±5°
X.	±0.40
X.x	±0.30
X.xx	±0.20
X.xxx	±0.15
UNSPECIFIED TOLERAuCES	

XKB Connection

DESIGN	阿树	VIEW:	MODEL TYPE: DC POWER JACK
CHECKED		UNIT: mm/in	PART NO.: DC–C033D–5.5A–2.5
APPROVED		SIZE: A4	DWG NO.: DC–C033D–5.5A–2.5

XKB INDUSTRIAL PRECISION CO.,LIMITED

SCALE	PAGE	REVISION
N/A	1/1	A1