RADIALL The next conneXion

TECHNICAL DATA SHEET

617 065 011

Series	ENVIRONMENTAL SIZE 8 TWINAX SOCKET CONTACT	Issue:	Page
EPXB		Mar. 09, 2009	1/1

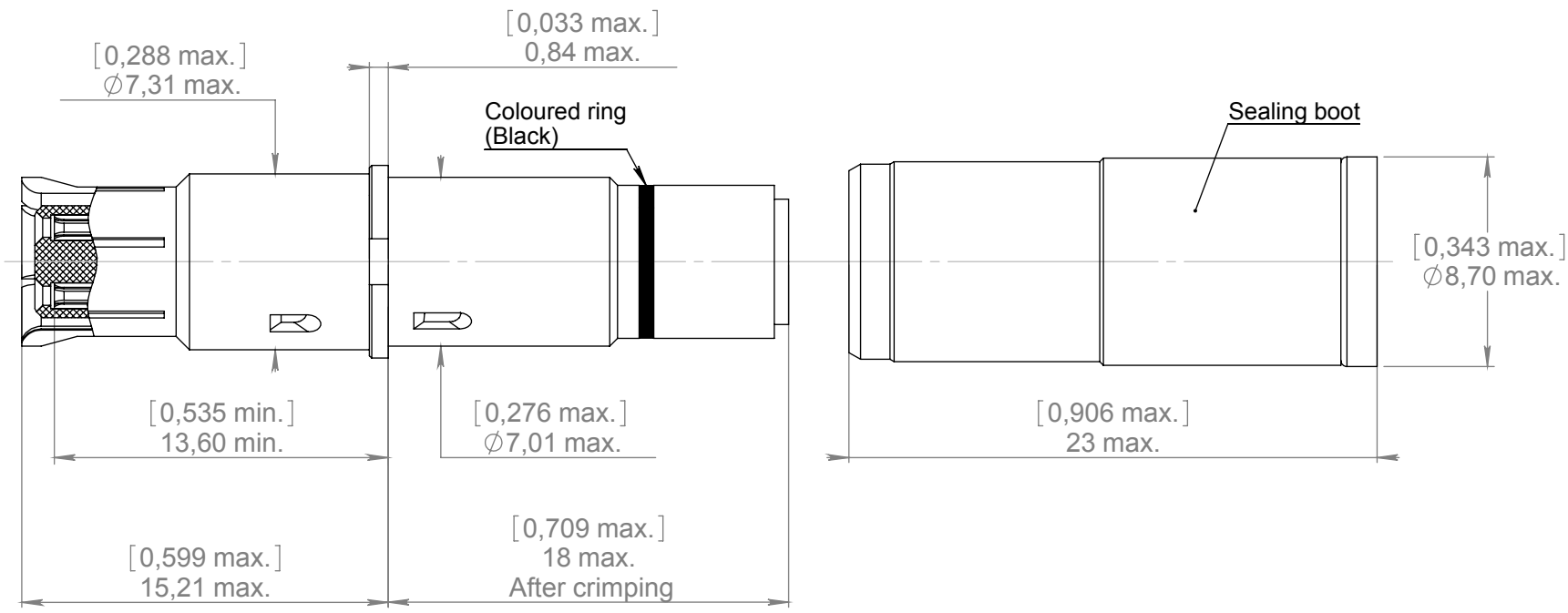

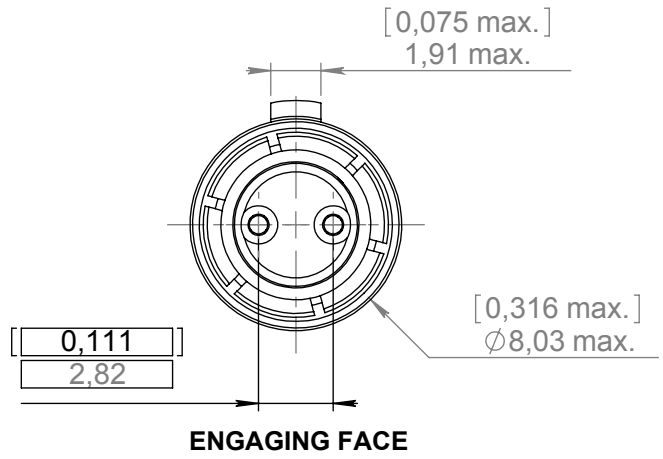

MATERIALS:

- Outer, center contact and crimping ferrule: Copper alloy.
- Insulator, spacer and centering boot: PTFE or equivalent.

FINISHES:

- Outer, center contacts and crimping ferrule: Gold over nickel plated.
- Insulator, spacer and centering boot: Non applicable.

NOTES:

- Extraction tool: M81969/28.03 (RADIALL P/N 282549001) or M81969/14-05.
- Contact delivered un-assembled.
- Wiring instruction according to RP56870.

CABLES:

- NEXANS (FILOTEX) P/N: ABS 0386 WF / ET96897.
- DRAKA-FILECA P/N: F 2703-37.
- RAYCHEM P/N: 1726A1424.

DIMENSIONS : mm (inch are given for information only)

CREATION	Issue	Revisions	Name	Approved
PEN: M03 0104 259B				
NOM: Perrin H.				
DATE: July 20 2004	Mar. 09, 09	"RAYCHEM: 1726A1424" cable added	MALTY	PESSARD
APPR.: LAHOREAU C.				

Confidential information not to be disclosed to third parties without Radiall approval
This information is given as an indication.In the continual goal to improve our products,we reserve the right to make any modifications judged necessary.

4112_9311

RADIALL PROPRIETARY INFORMATION

Mouser Electronics

Authorized Distributor

Click to View Pricing, Inventory, Delivery & Lifecycle Information:

Radiall:
617065011