Copyright FCI.

FCIconnect.com

PRODUCT NUMBER	PITCH
H5xx70x000J0G	5.00 mm

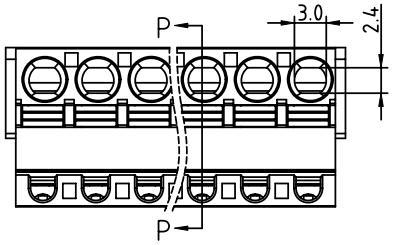

Dimension

DIM A	N×5.0+0.10
DIM B	(N-1)×5.0
DIM C	N×5.0+2.0
DIM D	N×5.0+0.4

N=Number of poles

POLES	Tolerance
2p-6p	±0.20
7p-12p	±0.30
13p-16p	±0.35
17p-24p	±0.40

PART NO.: H5 xx 7 0 x 0 00J0 G

Solid block
No. of poles
02 2 poles
03 3 poles
... ...
24 24 poles

Color
0 Black (RAL9005)
2 Red (RAL3001/D)
3 Orange(RAL2011/P)
4 Yellow(RAL1018/A)
5 Green(RAL6018/T)
6 Blue (RAL5015/A)
8 Grey(RAL7035/D)
9 White(RAL1102)
C Green(RAL6018/U)

RoHS compliant
(lead<4%)
In copper Alloy

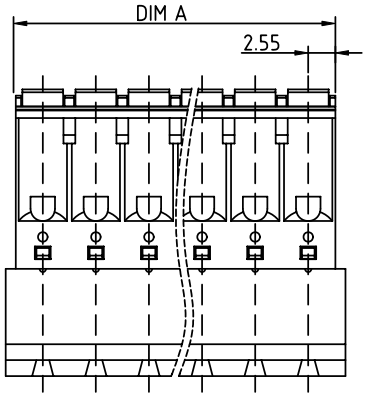

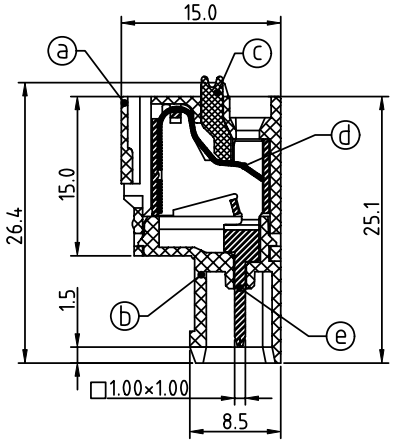

SECTION P-P

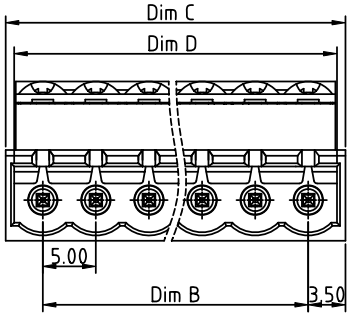

Material:
- Item ⓐ Top body:Thermoplastic (UL94V-0)
- Item ⓑ Bottom body:Thermoplastic (UL94V-0)
- Item ⓒ Terminal lever:Thermoplastic (UL94V-0) Orange (RAL2001/P)
- Item ⓓ Spring clamp:Stainless Steel
- Item ⓔ Male contact pin:PhBz (CuSn) Tin plated

Electrical	cULus
Voltage rating:	300V
Current rating:	10A
Solid wire(AWG):	12-26
Stranded wire(AWG):	12-26
Wire strip length:	9-10mm
Withstanding Voltage:	1.6KV
Operating temperature:	-40°C to +115°C
Safety Approval:	c UL us

mat'l. code				surface ASME Y14.5	tolerance ASME Y14.5	projection	product family TERMINAL BLOCK
ltr	ecn no	dr	date	tolerances unless otherwise specified			title
				angles	linear X.±0.5 / X.X±0.3 / X.XX±0.1	MM	TERMINAL BLOCK SPRING CLAMP,PLUGGABLE PLUG MALE CONNECTOR
				X°±1°		scale	
				dr	EVIN ZHONG 051614		dwg no H5xx70x000J0G — sheet 1 of 1 — size A4
				engr	EVIN ZHONG 051614		
				chr	HANKE FENG 051614		
				appd	SHI JUN 051614		type CUSTOMER Drawing
sheet index	revision	A					
	sheet	1					

Downloaded from Arrow.com.