REVISIONS					
REV.	ECN NO.	LOCATION	DESCRIPTION	DATE	DESIGN
A0	N/A		INITIAL RELEASE	/	/
A1	N/A		图面升级整理图面	2025.06.26	阿树

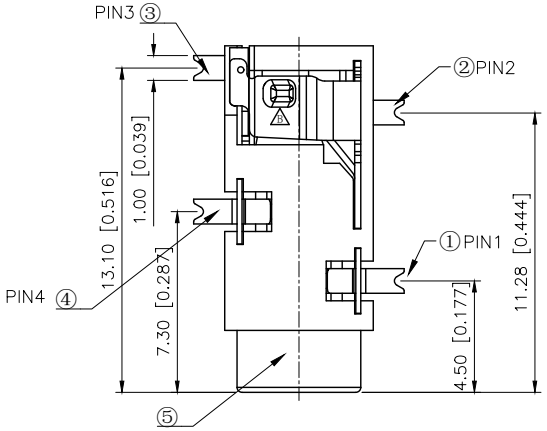

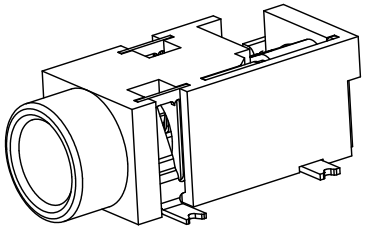

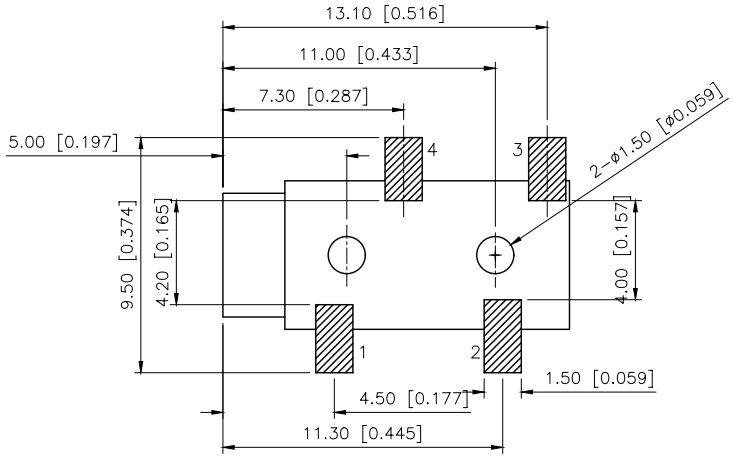

P.C.B LAYOUT MOUNTING PATTERN
(TOP VIEW)

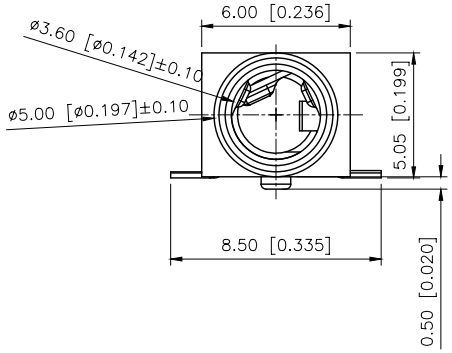

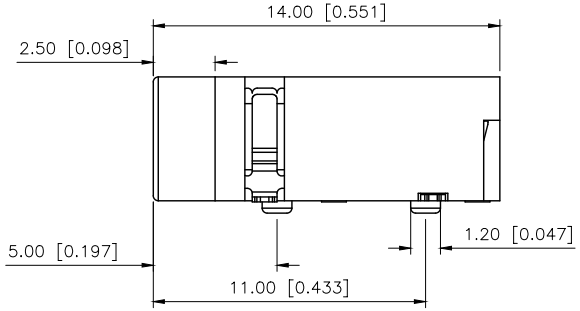

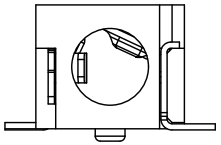

Model No.	PJ-35825-SMT
Schematic	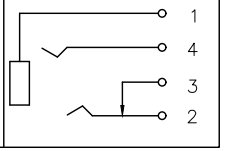

No.	PART NAME	QTY	MATERIAL(THICK)	PLATING(COLOR)
⑤	HOUSING	1	PA9T	SEE TABLE
④	TERMINAL 4#	1	PHOSPHOR BRONZE t=0.20	Ag-Plated
③	TERMINAL 3#	1	BRASS t=0.25	Ag-Plated
②	TERMINAL 2#	1	PHOSPHOR BRONZE t=0.25	Ag-Plated
①	TERMINAL 1#	1	PHOSPHOR BRONZE t=0.20	Ag-Plated

AuGLAR	±5°
X.	±0.40
X.x	±0.30
X.xx	±0.20
X.xxx	±0.15
UNSPECIFIED TOLERAuCES	

XKB Connection 星创

DESIGN	阿树	VIEW:	MODEL TYPE: 3.5 PHONE JACK
CHECKED		UNIT: mm/in	PART NO.: PJ-35825-SMT
APPROVED		SIZE: A4	DWG NO.: X-PJ-35825-SMT

XKB INDUSTRIAL PRECISION CO.,LIMITED

SCALE	PAGE	REVISION
N/A	1/1	A1