REVISIONS					
REV.	ECN NO.	LOCATION	DESCRIPTION	DATE	DESIGN
A0	N/A		INITIAL RELEASE	/	/
A1	N/A		图面升级整理图面	2025.06.25	阿树

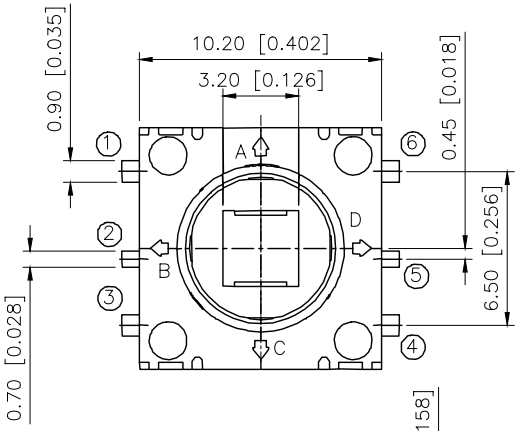

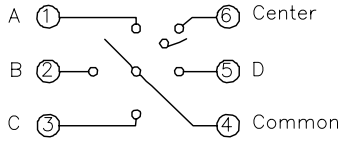

Circuit Diagram

NOTE:
Operating Force:
4-direction 160 ± 35 gf
center push 300 ± 35 gf
Travel 4-direction 5°±2°
center push 0.20±0.1mm

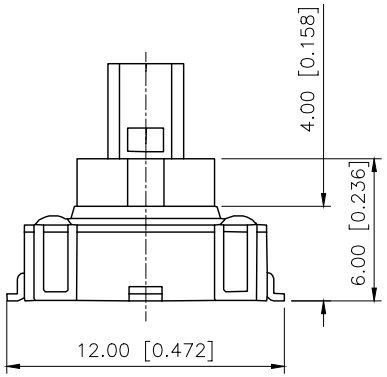

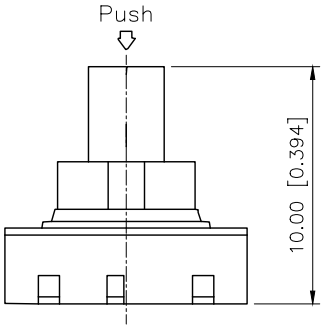

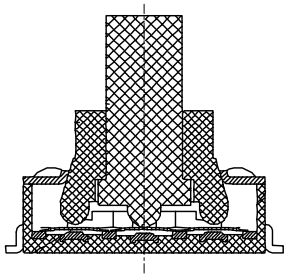

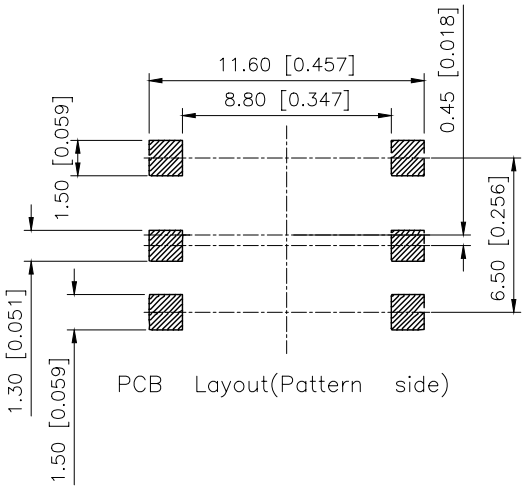

PCB Layout(Pattern side)

ITEM	PAPT NAMF	QTY	MATERIAL	FINISHING
⑦	Dust cover	1	Kapton film	
⑥	Contact	6	F.ag/Brass	Plating silver
⑤	Terminal	8	Brass(0.15t)	Plating silver
④	Base	1	Lcp	
③	Cover	1	Sus	Plating sn
②	Axle sleeve	1	Lcp	
①	Knob	1	Lcp	

AuGLAR	±5°
X.	±0.40
X.x	±0.30
X.xx	±0.20
X.xxx	±0.15
UNSPECIFIED TOLERAuCES	

XKB Connection

DESIGN	阿树	VIEW:	MODEL TYPE: MULTI-FUNCTIONAL SWITCH
CHECKED		UNIT: mm/in	PART NO.: TM-2027
APPROVED		SIZE: A4	DWG NO.: X-TM-2027

XKB INDUSTRIAL PRECISION CO.,LIMITED

SCALE	PAGE	REVISION
N/A	1/1	A1

www.helloxkb.com www.helloxkb.cn www.xk-dg.cn