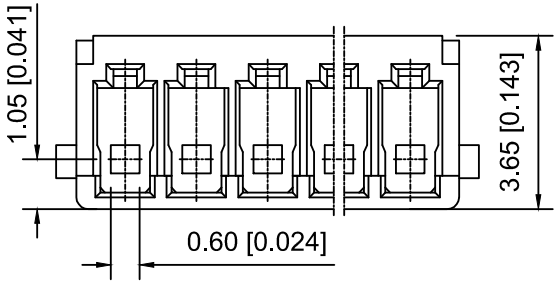

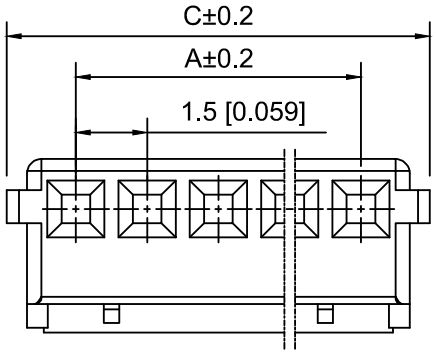

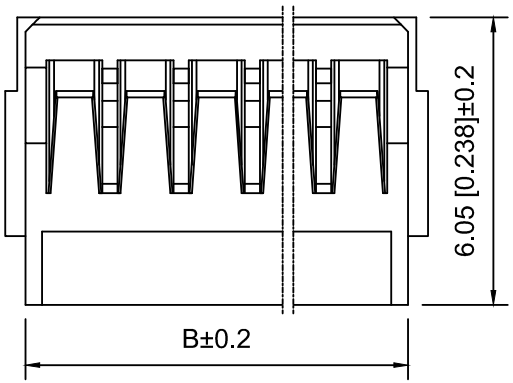

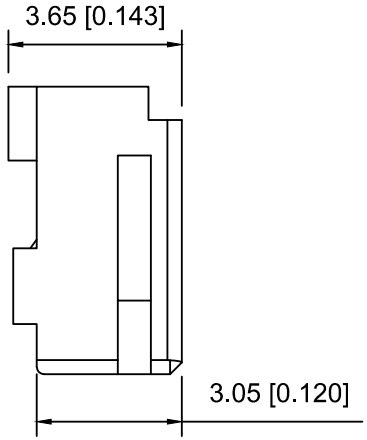

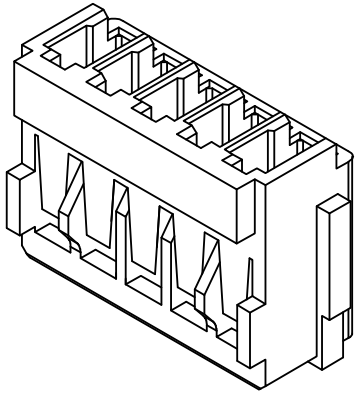

Specifications:
规格：
Voltage rating:350V AC/DC
额定电压：350V AC/DC
Current rating:3A AC/DC
额定电流：3A AC/DC
Withstanding voltage:500V AC/minute
耐受电压：500V AC/分钟
Temperature range:-40℃-+105℃
温度范围：-40℃-+105℃
Insulation resistance:≥500MΩ
绝缘电阻：≥500MΩ
Contact resistance:≤10mΩ
接触电阻：≤10mΩ

X1511 H - 06 A - N0
① ② ③ ④ ⑤

1.Series No
2.Category:H-HSG
3.Special No:A-There are convex on both sides
4.Row No.Pin No:XX-02~11P
5.Material:N0-Nylon 66 UL94V-0 ;

Poles	Dimensions(mm)		
	A	B	C
02	1.50	3.55	4.40
03	3.00	5.05	5.90
04	4.50	6.55	7.40
05	6.00	8.05	8.90
06	7.50	9.55	10.40
07	9.00	11.05	11.90
08	10.50	12.55	13.40

X1511H-06A-N0	Nylon 66	X1511W-A	X1511T-A
PART N0	Material	Suitable XKB Wafer	Suitable XKB Terminal

MARK	DESCRIPTION	DATE	REVISED	APPROVED
ΔX				
ΔX				
ΔX				

REVISIONS

UNSPECIFIED TOLERANCES	
ANGLAR	±5°
L≤ 4	±0.2
4<L≤ 16	±0.3
16<L≤ 63	±0.4
L> 63	±0.5

www.helloxkb.com www.helloxkb.cn www.xk-dg.cn

XKB

DSND		SCALE: N/A	MODEL TYPE: 1.5mm Crimp Style Connector
DWN		VIEW:	PART NO.: X1511H-06A-N0
CHKD		UNIT: mm/in	DWG NO.: X-X1511H-06A-N0
APPD		SIZE: A4	

XKB INDUSTRIAL PRECISION CO.,LIMITED

WEIGHT	SHEET	REVISION
	1/1	A0