REVISIONS					
REV.	ECN NO.	LOCATION	DESCRIPTION	DATE	DESIGN
A0	N/A		INITIAL RELEASE	/	/
A1	N/A		图面升级整理图面	2025.06.27	阿树

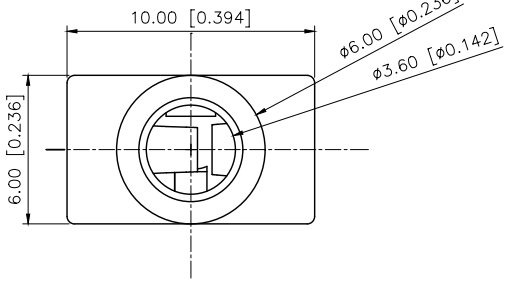

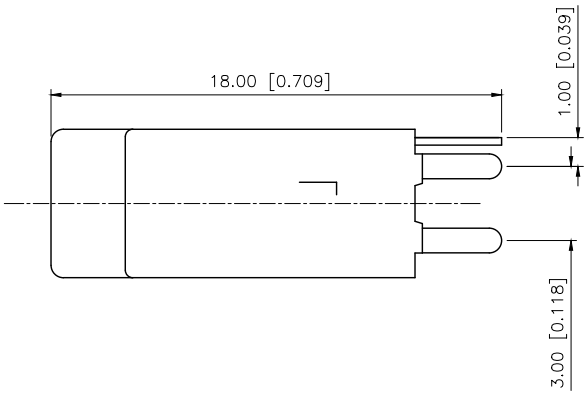

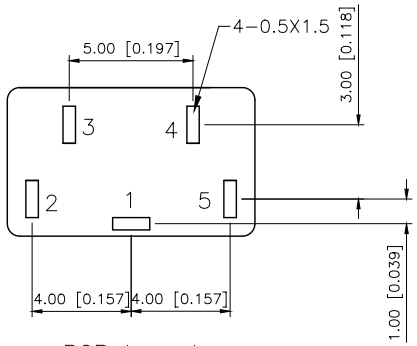

PCB Layout

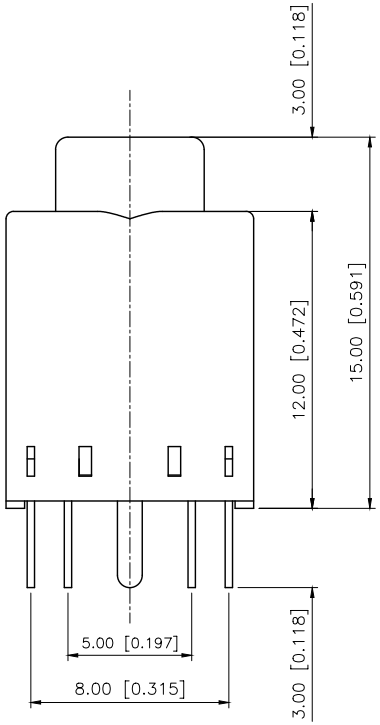

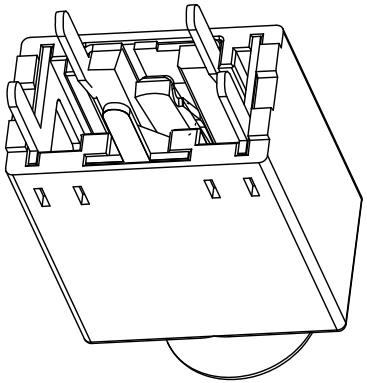

Model No.	PJ-358H-X
Schematic	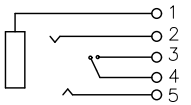
color	B:Black W:White

Technical characteristics
Temperature: −20°C~70°C
Rated load: DC30V 0.3A
Contact resistance: ≤30mΩ
Insulation resistance: ≥100MΩ
Actuating force: 2.2~30N
Life expectancy: 3000

Plastic	PBT	
Terminal 5	Phosphor Bronze	Silver
Terminal 4	Phosphor Bronze	Silver
Terminal 3	Phosphor Bronze	Silver
Terminal 2	Phosphor Bronze	Silver
Terminal 1	Phosphor Bronze	Silver
PAPT NAMF	MATERIAL	PLATING

AuGLAR	±5°
X.	±0.40
X.x	±0.30
X.xx	±0.20
X.xxx	±0.15
UNSPECIFIED TOLERAuCES	

XKB 星创 Connection

DESIGN	阿树	VIEW:	MODEL TYPE: 3.5 PHONE JACK
CHECKED		UNIT: mm/in	PART NO.: PJ-358H-B
APPROVED		SIZE: A4	DWG NO.: X-PJ-358H-B

XKB INDUSTRIAL PRECISION CO.,LIMITED

SCALE	PAGE	REVISION
N/A	1/1	A1