REVISIONS					
REV.	ECN NO.	LOCATION	DESCRIPTION	DATE	DESIGN
A0	N/A		INITIAL RELEASE	/	/
A1	N/A		图面升级整理图面	2025.1.6	阿树

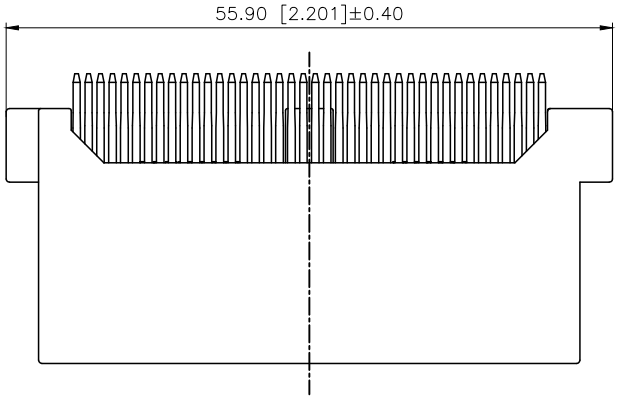

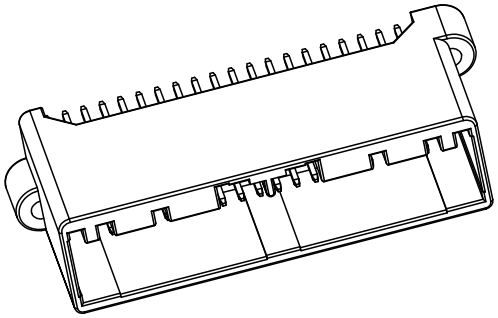

Current rating:3A AC/DC
额定电流：3A AC/DC
Temperature range:−40℃−+125℃
温度范围：−40℃−+125℃

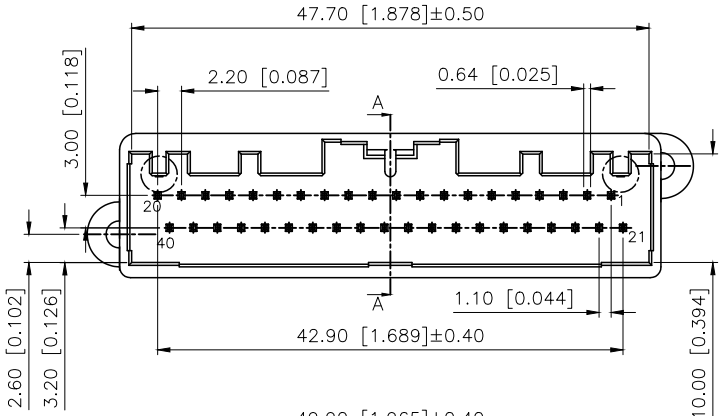

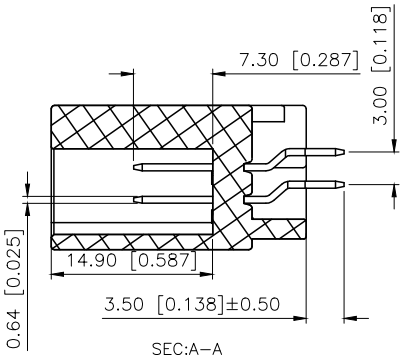

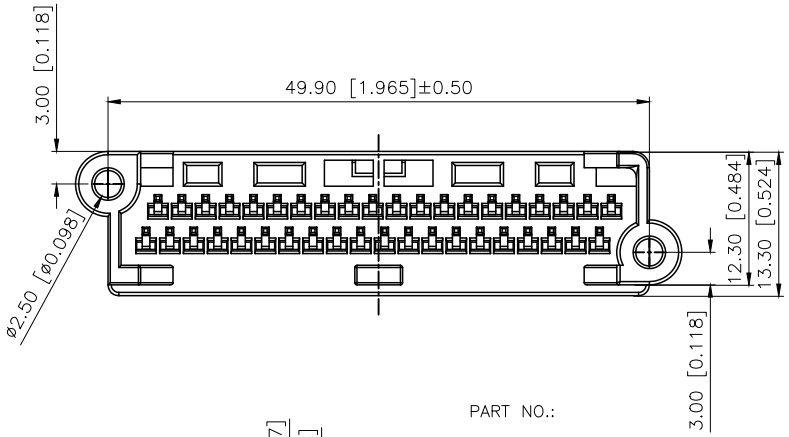

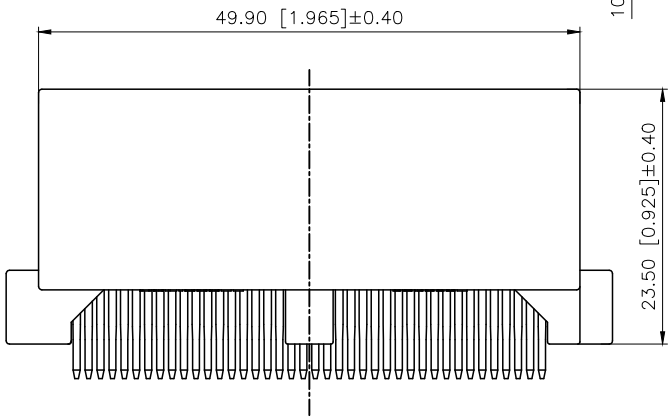

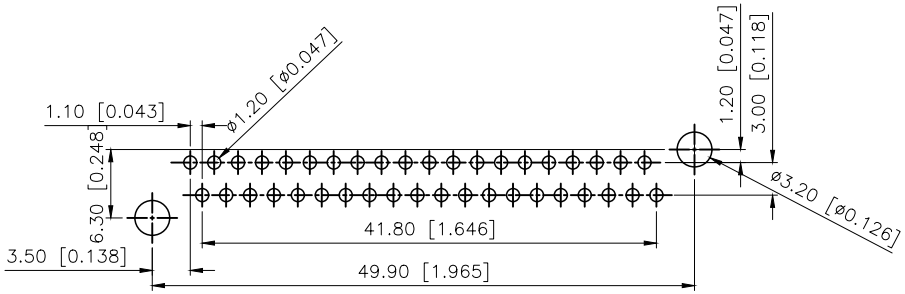

PCB Layout

PART NO.:

K 137635 W V−2x20 B PT SN
① ② ③ ④ ⑤ ⑥ ⑦ ⑧

①K:XKBTEK−Car Connector
②XKB Series No
③Categoiy:W−Wafer
④Welding Board Aagle:V−Straight 180°
⑤Row No.Pin No:2x20 Pin
⑥Special No:B−Misaligned foot
⑦Material:PT−PBT
⑧Palting:SN−Plated Tin

PART NO	Material	Color	Material(Pin)	Suitable XKB Housing
K137635WV−2xXXB−PTSN	PBT	Gray	Brass	K137635H−B

AuGLAR	±5°
X.	±0.40
X.x	±0.30
X.xx	±0.20
X.xxx	±0.15
UNSPECIFIED TOLERAuCES	

XKB Connection

DESIGN	阿树	VIEW:	MODEL TYPE: 2.2mm Automobile connector
CHECKED		UNIT: mm/in	PART NO.: K137635WV−2x20B−PTSN
APPROVED		SIZE: A4	DWG NO.:

XKB INDUSTRIAL PRECISION CO.,LIMITED

SCALE	PAGE	REVISION
N/A	1/1	A1