aimtec
Your Power Partner

Series AM6G-Z

6 Watt | DC-DC Converter

FEATURES:

- High Power Density SIP8
- High efficiency up to 87%
- On / Off Control
- No Minimum Load
- Operating temperature -40°C to + 85°C
- Continuous Short circuit protection
- Input / Output Isolation 1500 & 3000VDC

Models
Single Output

Model	Input Voltage (V)	Output Voltage (V)	Output Current max (mA)	Isolation (VDC)	Capacitor Load (µF)	Efficiency
AM6G-0503SZ	4.5-9	3.3	1300	1500	6600	75
AM6G-0505SZ	4.5-9	5	1200	1500	3300	79
AM6G-0509SZ	4.5-9	9	666	1500	2000	83
AM6G-0512SZ	4.5-9	12	500	1500	1600	84
AM6G-0515SZ	4.5-9	15	400	1500	1400	84
AM6G-0524SZ	4.5-9	24	250	1500	680	84
AM6G-1203SZ	9-18	3.3	1300	1500	6600	76
AM6G-1205SZ	9-18	5	1200	1500	3300	83
AM6G-1209SZ	9-18	9	666	1500	2000	84
AM6G-1212SZ	9-18	12	500	1500	1600	85
AM6G-1215SZ	9-18	15	400	1500	1400	85
AM6G-1224SZ	9-18	24	250	1500	680	86
AM6G-2403SZ	18-36	3.3	1300	1500	6600	78
AM6G-2405SZ	18-36	5	1200	1500	3300	83
AM6G-2409SZ	18-36	9	666	1500	2000	85
AM6G-2412SZ	18-36	12	500	1500	1600	85
AM6G-2415SZ	18-36	15	400	1500	1400	87
AM6G-2424SZ	18-36	24	250	1500	680	87
AM6G-4803SZ	36-75	3.3	1300	1500	6600	76
AM6G-4805SZ	36-75	5	1200	1500	3300	80
AM6G-4809SZ	36-75	9	666	1500	2000	85
AM6G-4812SZ	36-75	12	500	1500	1600	84
AM6G-4815SZ	36-75	15	400	1500	1400	86
AM6G-4824SZ	36-75	24	250	1500	680	84
AM6G-0503SH30Z	4.5-9	3.3	1300	3000	6600	75
AM6G-0505SH30Z	4.5-9	5	1200	3000	3300	79
AM6G-0509SH30Z	4.5-9	9	666	3000	2000	83
AM6G-0512SH30Z	4.5-9	12	500	3000	1600	84
AM6G-0515SH30Z	4.5-9	15	400	3000	1400	84
AM6G-0524SH30Z	4.5-9	24	250	3000	680	84
AM6G-1203SH30Z	9-18	3.3	1300	3000	6600	76
AM6G-1205SH30Z	9-18	5	1200	3000	3300	83
AM6G-1209SH30Z	9-18	9	666	3000	2000	84
AM6G-1212SH30Z	9-18	12	500	3000	1600	85
AM6G-1215SH30Z	9-18	15	400	3000	1400	85
AM6G-1224SH30Z	9-18	24	250	3000	680	86
AM6G-2403SH30Z	18-36	3.3	1300	3000	6600	78
AM6G-2405SH30Z	18-36	5	1200	3000	3300	83
AM6G-2409SH30Z	18-36	9	666	3000	2000	85
AM6G-2412SH30Z	18-36	12	500	3000	1600	85
AM6G-2415SH30Z	18-36	15	400	3000	1400	87
AM6G-2424SH30Z	18-36	24	250	3000	680	87
AM6G-4803SH30Z	36-75	3.3	1300	3000	6600	76
AM6G-4805SH30Z	36-75	5	1200	3000	3300	80
AM6G-4809SH30Z	36-75	9	666	3000	2000	85
AM6G-4812SH30Z	36-75	12	500	3000	1600	84
AM6G-4815SH30Z	36-75	15	400	3000	1400	86
AM6G-4824SH30Z	36-75	24	250	3000	680	84

Downloaded from Arrow.com.

Models
Dual output

Model	Input Voltage (V)	Output Voltage (V)	Output Current max (mA)	Isolation (VDC)	Capacitor Load (µF)	Efficiency (%)
AM6G-0505DZ	4.5-9	±5	±600	1500	±2000	81
AM6G-0512DZ	4.5-9	±12	±250	1500	±900	84
AM6G-0515DZ	4.5-9	±15	±200	1500	±660	84
AM6G-1205DZ	9-18	±5	±600	1500	±2000	82
AM6G-1212DZ	9-18	±12	±250	1500	±900	84
AM6G-1215DZ	9-18	±15	±200	1500	±660	86
AM6G-2405DZ	18-36	±5	±600	1500	±2000	82
AM6G-2412DZ	18-36	±12	±250	1500	±900	84
AM6G-2415DZ	18-36	±15	±200	1500	±660	84
AM6G-4805DZ	36-75	±5	±600	1500	±2000	82
AM6G-4812DZ	36-75	±12	±250	1500	±900	85
AM6G-4815DZ	36-75	±15	±200	1500	±660	85
AM6G-0505DH30Z	4.5-9	±5	±600	3000	±2000	81
AM6G-0512DH30Z	4.5-9	±12	±250	3000	±900	84
AM6G-0515DH30Z	4.5-9	±15	±200	3000	±660	84
AM6G-1205DH30Z	9-18	±5	±600	3000	±2000	82
AM6G-1212DH30Z	9-18	±12	±250	3000	±900	84
AM6G-1215DH30Z	9-18	±15	±200	3000	±660	86
AM6G-2405DH30Z	18-36	±5	±600	3000	±2000	82
AM6G-2412DH30Z	18-36	±12	±250	3000	±900	84
AM6G-2415DH30Z	18-36	±15	±200	3000	±660	84
AM6G-4805DH30Z	36-75	±5	±600	3000	±2000	82
AM6G-4812DH30Z	36-75	±12	±250	3000	±900	85
AM6G-4815DH30Z	36-75	±15	±200	3000	±660	85

NOTE: All specifications in this datasheet are measured at an ambient temperature of 25°C, humidity<75%, nominal input voltage and at rated output load unless otherwise specified

Input Specifications

Parameters	Nominal	Typical	Maximum	Units
Voltage range	5 12 24 48	4.5-9 9-18 18-36 36-75		VDC
Filter	Capacitor			
Transient recovery time		500		µs
Transient Response deviation	3.3 & 5 V output		±3 ±5	%
Start up time		30		ms
Absolute Maximum Rating	5 Vin 12 Vin 24 Vin 48 Vin	-0.7-15 -0.7-25 -0.7-50 -0.7-100		VDC
Input reflected ripple current*	See Application Test Circuit	30		mA p-p
On/Off Control	ON – high impedance or open; OFF – 2-4mA input current through 1KΩ (standby 2.5mA max)			

* The input reflected ripple current should be measured with connected 12µH inductor and 47µF input capacitor (ESR<1Ω at 100 KHz)

Isolation Specifications

Parameters	Conditions	Typical	Rated	Units
Tested I/O voltage	3 sec		1500 & 3000	VDC
Resistance		> 1000		MOhm
Capacitance		50		pF

Downloaded from Arrow.com.

Output Specifications

Parameters	Conditions	Typical	Maximum	Units
Voltage accuracy		±1		%
Cross Regulation (Dual)	25% load on one output and 100% load on second output	±5		%
Short Circuit protection	Continuous			
Short Circuit restart	Auto recovery			
Line voltage regulation	LL~HL		±0.2	%
Load voltage regulation	0-100% load		±1	%
Temperature coefficient		±0.02		%/ºC
Ripple & Noise*	At 20MHz Bandwidth		75	mV p-p

* Measured with 0.1µF CC and 10µF EC.

General Specifications

Parameters	Conditions	Typical	Maximum	Units
Switching frequency	100% load	>100		KHz
Operating temperature	See Derating Chart	-40 to +85		ºC
Storage temperature	-55 to +125			ºC
Max Case temperature			+105	ºC
Cooling	Free air convection			
Humidity			95	%
Case material	Non-conductive black plastic			
Pin Material	C5191R-H Solder coated			
Weight		4.5		g
Dimensions (L x W x H)	0.86 x 0.36 x 0.44 inch 21.85 x 9.20 x 11.18 mm			
MTBF	>770,000 hrs (MIL-HDBK -217F, Ground Benign, t=+25ºC)			

Safety Specifications

Parameters	
Agency Approval	CE, UL
Standards	EN 55032, Class A, with external EMI filter circuit, EN 55024: 2010
	IEC/EN/UL 60950-1:2001 & IEC/EN/UL 62368-1
	IEC61000-4-2, Perf. Criteria A
	IEC61000-4-3, Perf. Criteria A
	IEC61000-4-4, Perf. Criteria A (external 330uF/100V cap required)
	IEC61000-4-5, Perf. Criteria A (external 330uF/100V cap required)
	IEC61000-4-6, Perf. Criteria A
	IEC61000-4-8, Perf. Criteria A

Pin Out Specifications

Pin	1500 & 3000VDC	
	Single	Dual
1	- V Input	- V Input
2	+ V Input	+ V Input
3	On/Off Control	On/Off Control
5	N.C.	N.C.
6	+ V Output	+ V Output
7	- V Output	Common
8	N.C.	- V Output

Dimensions

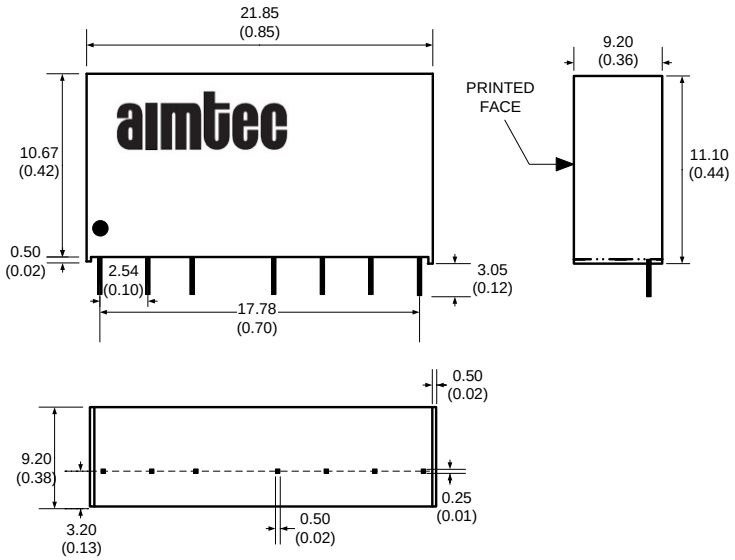

Downloaded from Arrow.com.

Derating

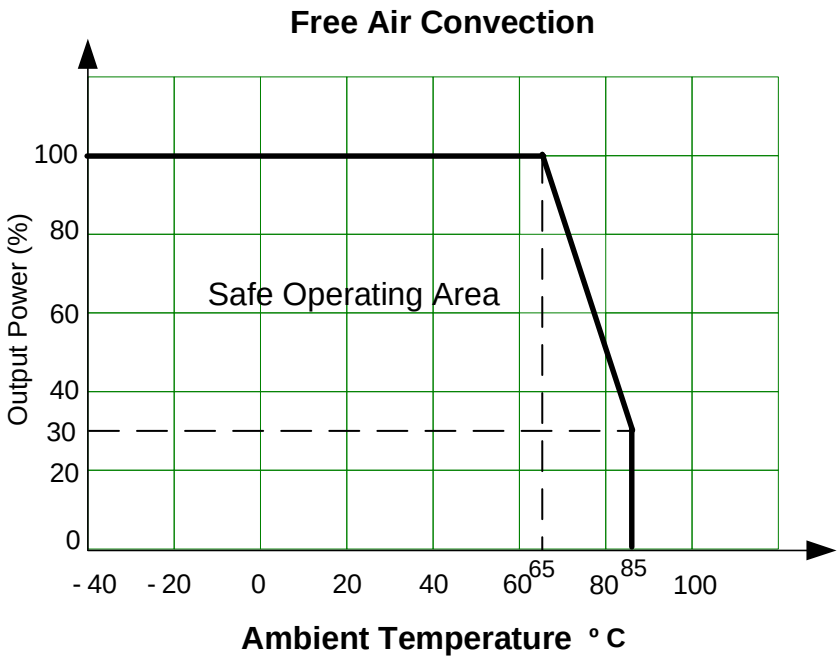

Control ON/OFF pin connection example:

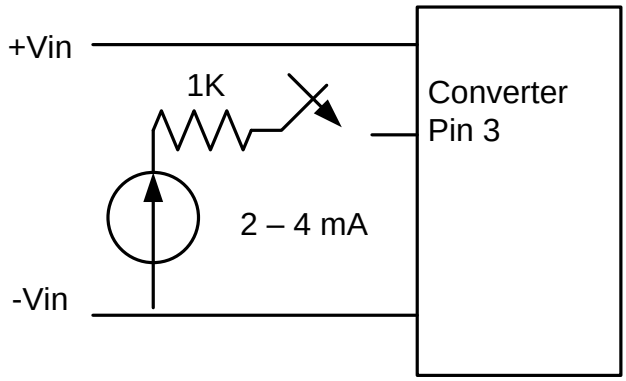

The voltage could be applied trough a limiting resistor. The converter is turned on the external switching circuit is open.

Downloaded from Arrow.com.

EMI recommended circuit

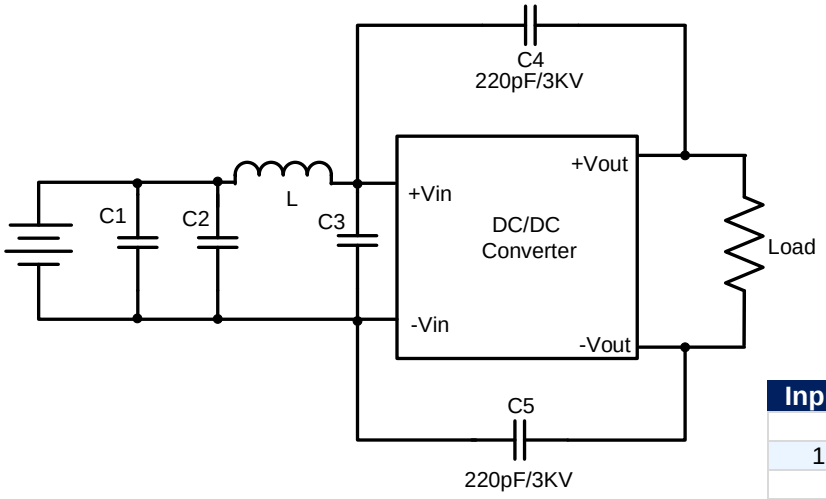

Input Voltage	C1	C2 &C3	L
5V	220uF/100V	22uF/25V	10uH
12V & 24V	-	10uF/50V	
48V			15uH

NOTE: 1. Datasheets are updated as needed and as such, specifications are subject to change without notice. Once printed or downloaded, datasheets are no longer controlled by Aimtec; refer to www.aimtec.com for the most current product specifications. **2.** Product labels shown, including safety agency certifications on labels, may vary based on the date manufactured. **3.** Mechanical drawings and specifications are for reference only. **4.** All specifications are measured at an ambient temperature of 25°C, humidity<75%, nominal input voltage and at rated output load unless otherwise specified. **5.** Aimtec may not have conducted destructive testing or chemical analysis on all internal components and chemicals at the time of publishing this document. CAS numbers and other limited information are considered proprietary and may not be available for release. **6.** This product is not designed for use in critical life support systems, equipment used in hazardous environments, nuclear control systems or other such applications which necessitate specific safety and regulatory standards other the ones listed in this datasheet. **7.** Warranty is in accordance with Aimtec's standard Terms of Sale available at www.aimtec.com.

Downloaded from Arrow.com.