REVISIONS					
REV.	ECN NO.	LOCATION	DESCRIPTION	DATE	DESIGN
A1	N/A		图框升级整理图面	2024.08.06	阿 树

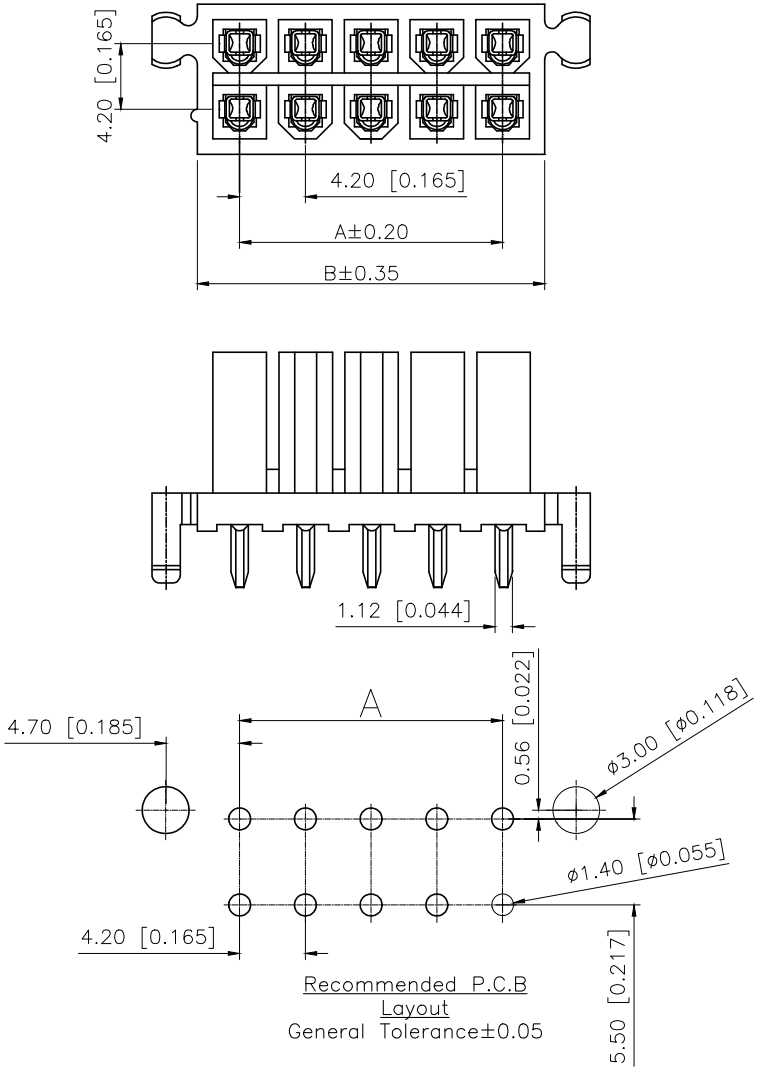

■SPECIFICATIONS
- •Voltage rating:600V AC/DC
- •Current rating:9A AC/DC
- •Withstanding Voltage:1500V AC/minute
- •Temperature range:−45°C+125°C
- •Insulation resistance:≥1000MΩ
- •Contact resistance:≤10mΩ
- •After environmental testing:≤20mΩ

PART NO.:

X9357 W V−2x09 S−N0 SW
① ② ③ ④ ⑤ ⑥ ⑦

① Series No
② Category:W−Wafer
③ Welding Board Angle:V−Straight 180°
④ Row No−Pin No：2xXX−2x01P~2x12P
⑤ Plug the PIn&Specal NO.:S−With the column
⑥ Material:NO−PA66 94V−0
⑦ Planting Category:SW−Fog Tin plating

Poles	Dimensions(mm)			Poles	Dimensions(mm)		
	A	B	C		A	B	C
2x01	——	5.40	9.40	2x07	25.20	30.60	34.60
2x02	4.20	9.60	13.60	2x08	29.40	34.80	38.80
2x03	8.40	13.80	17.80	2x09	33.60	39.00	43.00
2x04	12.60	18.00	22.00	2x10	37.80	43.20	47.20
2x05	16.80	22.20	26.20	2x11	42.00	47.40	51.40
2x06	21.00	26.40	30.40	2x12	46.20	51.60	55.60

PARE NO	Material	Material(Pin)	Finish(Pin)	Suitable XKB Housing
X9357WV−2x09S−N0SW	Nylon 66 UL 94V−0	Brass	Tin−Plated	X9357H

ANGLAR	±5°
X.	±0.40
X.x	±0.30
X.xx	±0.20
X.xxx	±0.15
UNSPECIFIED TOLERANCES	

XKB INDUSTRIAL PRECISION CO.,LIMITED

DESIGN	阿 树	VIEW:	MODEL TYPE: 4.20 mm Crimp Style Connectors
CHECKED		UNIT: mm/in	PART NO.: X9357WV−2x09S−N0SW
APPROVED		SIZE: A4	DWG NO.: X−X9357WV−2x09S−N0SW

SCALE	PAGE	REVISION
N/A	1/1	A1