| REVISIONS | | | | | |
|---|---|---|---|---|---|
| REV. | ECN NO. | LOCATION | DESCRIPTION | DATE | DESIGN |
| A0 | N/A | | INITIAL RELEASE | | |
| A1 | N/A | | | 2024.07.10 | 阿 树 |

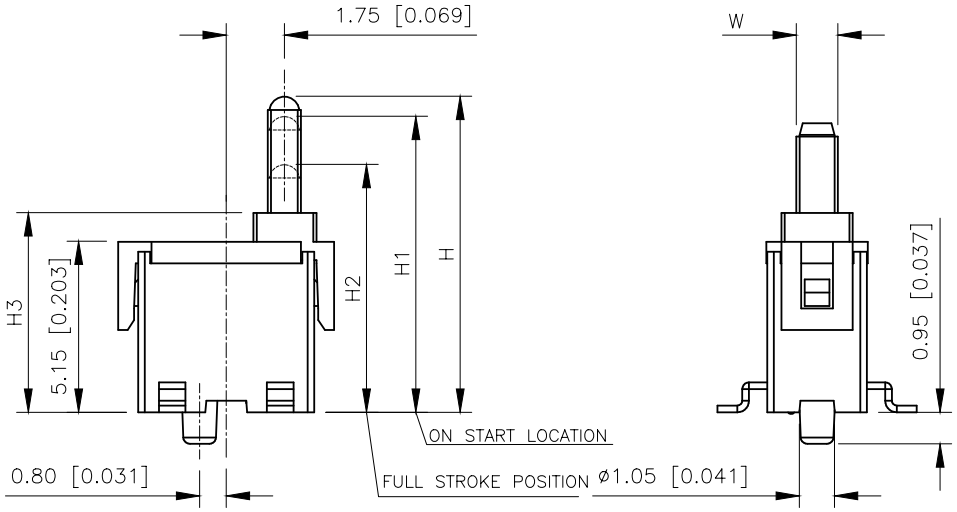


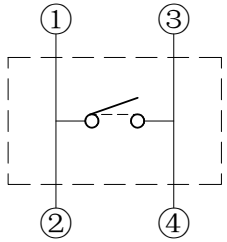


SCHEMATIC
NORMALLY OPEN

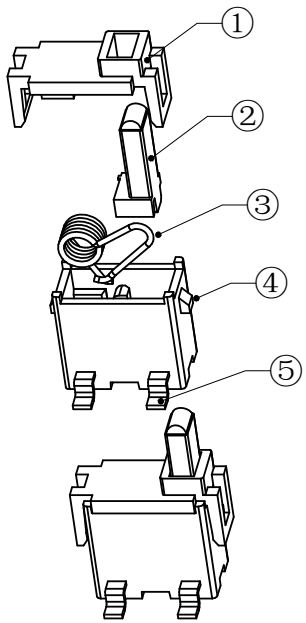


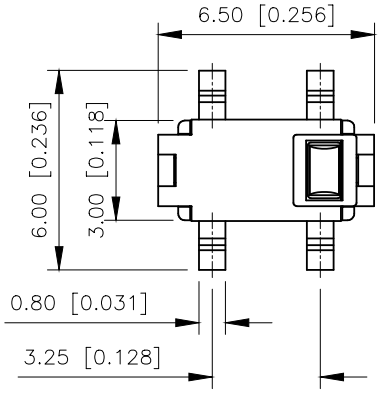


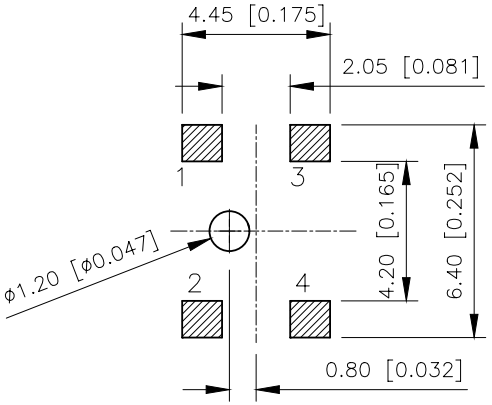


PCB LAYOUT(TOP VIEW)

NOTE
RATING:DC 30V 0.1A
Operating Force: 40±10gf
Lifetime:100,000 Cycles

| PART NO. | H | H1 | H2 | H3 | W |
|---|---|---|---|---|---|
| TM-T07A-2 | 8.50 | 7.90 | 6.45 | 6.00 | 1.65 |
| TM-T07A-3 | 8.70 | 8.10 | 6.65 | | |
| TM-T07A-4 | 9.50 | 8.90 | 7.45 | | 1.25 |
| TM-T07A-1 | 10.50 | 9.90 | 8.45 | 7.10 | |
| TM-T07A-5 | 11.00 | 10.40 | 8.95 | | |
| TM-T07A-7 | 11.50 | 10.90 | 9.45 | | |
| TM-T07A-6 | 12.20 | 11.60 | 10.15 | | 1.50 |

| NO | NAME | QTY | SPECIFICATION | REMARK |
|---|---|---|---|---|
| 5 | WELDING FEET | 1 | BRASS | CU/EP.Ni Ag |
| 4 | PEDESTAL | 1 | PPA | BLACK |
| 3 | ELASTIC PRESSURE | 1 | Phosphor copper wire | CU/EP.Ni Ag |
| 2 | DIAL HANDLE | 1 | PPA | BLACK |
| 1 | LID | 1 | PPA | BLACK |

| ANGLAR | ±5° |
|---|---|
| X. | ±0.40 |
| X.x | ±0.30 |
| X.xx | ±0.20 |
| X.xxx | ±0.15 |
| UNSPECIFIED TOLERANCES | |

XKB

| | | | |
|---|---|---|---|
| DESIGN | 阿 树 | VIEW: | MODEL TYPE: DETECT SWITCH |
| CHECKED | | UNIT: mm/in | PART NO.: TM-T07A-2 |
| APPROVED | | SIZE: A4 | DWG NO.: X-TM-T07A-2 |

XKB INDUSTRIAL PRECISION CO.,LIMITED

| SCALE | PAGE | REVISION |
|---|---|---|
| N/A | 1/1 | A1 |