REVISIONS					
REV.	ECN NO.	LOCATION	DESCRIPTION	DATE	DESIGN
A0	N/A		INITIAL RELEASE	/	/
A1	N/A		产品外观变更，图面升级整理图面	2025.2.22	阿树

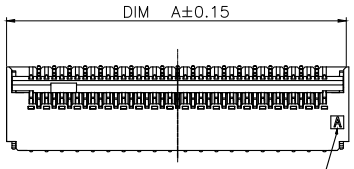

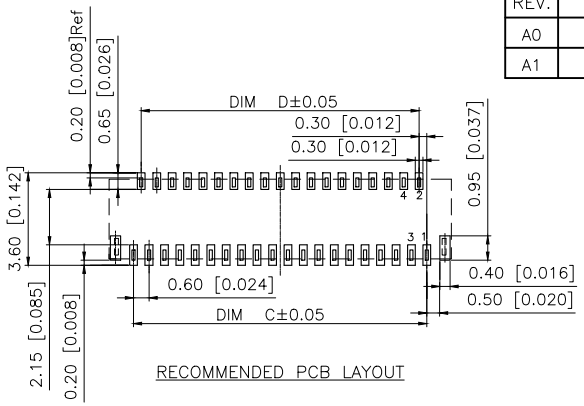

RECOMMENDED PCB LAYOUT

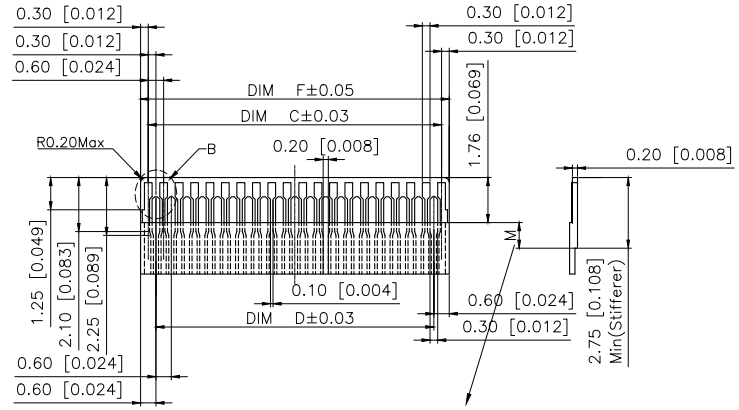

Dimension M must be 0.5mm minimum when the stiffener than 2.75mm

RECOMMENDED FPC

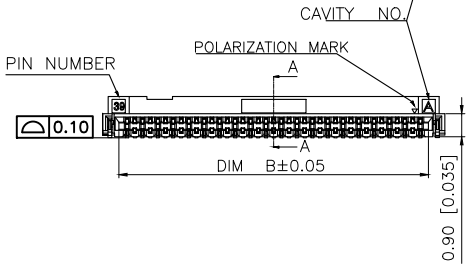

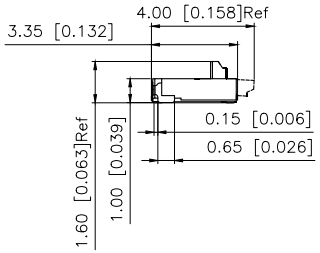

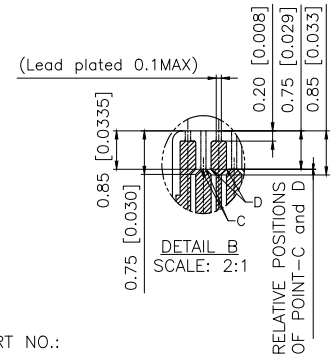

DETAIL B
SCALE: 2:1

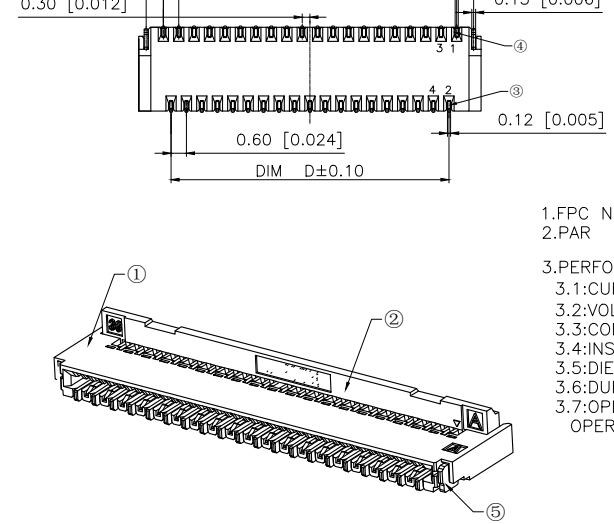

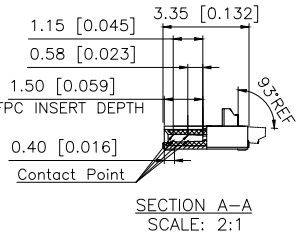

SECTION A-A
SCALE: 2:1

Pin No.	DIM A	DIM B	DIM C	DIM D	DIM E	DIM F
9	4.30	3.03	2.40	1.80	3.73	3.00
11	4.90	3.63	3.00	2.40	4.33	3.60
13	5.50	4.23	3.60	3.00	4.93	4.20
15	6.10	4.83	4.20	3.60	5.53	4.80
17	6.70	5.43	4.80	4.20	6.13	5.40
19	7.30	6.03	5.40	4.80	6.73	6.00
21	7.90	6.63	6.00	5.40	7.33	6.60
23	8.50	7.23	6.60	6.00	7.93	7.20
25	9.10	7.83	7.20	6.60	8.53	7.80
27	9.70	8.43	7.80	7.20	9.13	8.40
31	10.90	9.63	9.00	8.40	10.33	9.60
33	11.50	10.23	9.60	9.00	10.93	10.20
35	12.10	10.83	10.20	9.60	11.53	10.80
37	12.70	11.43	10.80	10.20	12.13	11.40
39	13.30	12.03	11.40	10.80	12.73	12.00
41	13.90	12.63	12.00	11.40	13.33	12.60
45	15.10	13.83	13.20	12.60	14.53	13.80
49	16.30	15.03	14.40	13.80	15.73	15.00
51	16.90	15.63	15.00	14.40	16.33	15.60
57	18.70	17.43	16.80	16.20	18.13	17.40
61	19.90	18.63	18.00	17.40	19.33	18.60

1.FPC NOT MATING CONDITION BANNED CLOSURE
2.PAR NO. LEGEND.

3.PERFORMANCE:
3.1:CURRENT RATING:0.2A/PIN
3.2:VOLTAGE RATING:30V(AC/DC)
3.3:CONTACT RESISTANCE:INITIAL VALUE 100mOHM Max.
3.4:INSULATIOM RESISTANCE:50MOHM Min.
3.5:DIELERIC WITHSTANDING VOLTAGE:100V AC FOR 1MINUTE
3.6:DURABILT: 20 TIMES Min
3.7:OPERATING TEMPERATURE:-40 ~85
OPERATING HUMIDITY RANGE:20% TO 85%

PART NO.:

X03A10 H 45 G
① ② ③ ④

①X03A10=0.3 mm Pitch(H=1.0mm) : Series Name
②Assembly style: L:Low Contact SMT Type;
U:Upper Contact SMT Type;
D:Double-Face Contact SMT Type;
H:Back-flip Double-Face Contact SMT Type;
③Number of terminals :XX=09-61PIN
④Plating: G:Gold Flash Over Nickel;
T:Tin Over Nickel

NO.	COMPONENTS	MATERIALS	FINISH/COLOR SPECIFICATION	QUANTITY
5	STATOR	PHOSPHOR BRONZE		2
4	TERMINAL II	PHOSPHOR BRONZE		POSITION
3	TERMINAL I	PHOSPHOR BRONZE		POSITION
2	COVER	ERMOPLASTIC UL94V-0	BLACK	1
1	HOUSING	THERMOPLASTIC UL94V-0	NATURAL	1

AuGLAR	±5°
X.	±0.40
X.x	±0.30
X.xx	±0.20
X.xxx	±0.15
UNSPECIFIED TOLERAuCES	

XKB Connection 星创

DESIGN	阿树	VIEW:	MODEL TYPE: FPC CONNECTOR
CHECKED		UNIT: mm/in	PART NO.: X03A10H45G
APPROVED		SIZE: A4	DWG NO.: X-X03A10H45G

XKB INDUSTRIAL PRECISION CO.,LIMITED

SCALE	PAGE	REVISION
N/A	1/1	A1