https://product.tdk.com/en/power/fps
www.emea.lambda.tdk.com/fps

1000W 1U Front End Power Supplies

Industrial COTS Test COMM Broadcast

The FPS1000 AC-DC industrial power supplies can be operated in a hot-swap redundant configuration, or used to provide up to 3,000W of bulk power. Up to three power supplies can be fitted in a variety of 19" 1U high racks, for configuration as a single, dual, or triple output. The FPS supplies have internal ORing diodes and current share for automatic parallel operation. Communication is possible with the power supplies using the optional isolated (I^2C) interface. AC fail, DC good, remote on/off and a 12V auxiliary output are fitted as standard.

Features	Benefits
• 1U High	• Utilizes Less Rack Space
• Hotswap Capable	• Suitable for N+1 Redundancy
• High Efficiency	• Less Heat Dissipated in System
• Full Array of Signals	• Easier System Monitoring

Model Selector

Model	Output Voltage (V)	Adjustment Range (V)[1]	Maximum Current (A)	Maximum Power (W)	Output Noise (mV)	Efficiency (%) (115/230Vac)	Over Voltage Protection (V)
Front AC Input Configurations							
FPS1000-12/P	12	10.5 - 13.2	72	864	150	80 / 83	14.3 to 15.7
FPS1000-12/PS	12	10.5 - 13.2	72	864	150	80 / 83	14.3 to 15.7
FPS1000-24/P	24	21.5 - 29	40	960	200	83 / 86	31 to 34
FPS1000-24/PS	24	21.5 - 29	40	960	200	83 / 86	31 to 34
FPS1000-32/P	32	28.8 - 38.4	31	992	250	84 / 87	41.5 to 45.5
FPS1000-32/PS	32	28.8 - 38.4	31	992	250	84 / 87	41.5 to 45.5
FPS1000-48/P	48	43 - 58	21	1008	300	85 / 88	62 to 66
FPS1000-48/PS	48	43 - 58	21	1008	300	85 / 88	62 to 66
FPS-S1U/P	Rack (3 slot), contains two blanking panels						
FPS-T1U/P	Rack with 3 individual outputs (floating)						
Rear AC input Configurations							
FPS1000-12	12	10.5 - 13.2	72	864	150	80 / 83	14.3 to 15.7
FPS1000-12/S	12	10.5 - 13.2	72	864	150	80 / 83	14.3 to 15.7
FPS1000-24	24	21.5 - 29	40	960	200	83 / 86	31 to 34
FPS1000-24/S	24	21.5 - 29	40	960	200	83 / 86	31 to 34
FPS1000-32	32	28.8 - 38.4	31	992	250	84 / 87	41.5 to 45.5
FPS1000-32/S	32	28.8 - 38.4	31	992	250	84 / 87	41.5 to 45.5
FPS1000-48	48	43 - 58	21	1008	300	85 / 88	62 to 66
FPS1000-48/S	48	43 - 58	21	1008	300	85 / 88	62 to 66
FPS-S1U	Rack (3 slot), contains two blanking panels						
FPS-T1U	Rack with 3 individual outputs (floating)						

Model Selector (Full Systems)

Model	Description	Output Voltage (V)	Max Current (A)	Max Power (W)
FPS3000-24/P	3 x FPS1000-24/P, 1 x FPS-S1U/P	24	120	2880
FPS3000-24/PS	3 x FPS1000-24/PS, 1 x FPS-S1U/P	24	120	2880
FPS3000-48/P	3 x FPS1000-48/P, 1 x FPS-S1U/P	48	63	3000
FPS3000-48/PS	3 x FPS1000-48/PS, 1 x FPS-S1U/P	48	63	3000

FPS1000-	12	/	S

Output voltage 12, 24, 32, 48

BLANK	No I²C
S	I²C interface
P	Front IEC320-C14 AC Inlet Connector
POE*	1500Vac Output to Ground Isolation (output noise 400mV) *FPS1000-48 only

FPS3000-	24	/	S

Output voltage 24, 48

Blank	No I²C
S	I²C interface
P	Front IEC320-C14 AC Inlet Connector

Specifications

Model		FPS1000-12	FPS1000-24	FPS1000-32	FPS100048
Input					
Input Voltage Range (2)	Vac / Vdc	85 - 265 / 120 - 360 (Derate to 90% load below 100Vac)			
Input Frequency (2)	Hz	47 - 63			
Input Current (100/200Vac)	A	12 / 6			
Inrush Current	A	<40			
Leakage Current	mA	<1.1 at 230Vac input			
Power Factor Correction	-	>0.98 at full load			
Harmonic Compliance	-	Meets EN61000-3-2 class A (20 - 100% load),			
Hold Up Time (100 Vac input)	ms	20 typical (800W loading)			
Efficiency (typ) 100 / 200Vac	%	See model selector			
Conducted & Radiated EMI	-	Built to meet EN55032B, FCC part 15J-B, VCCI-B			
Immunity	-	See immunity section			
Insulation Class	-	Class I			
Safety Certifications and Markings	-	IEC/UL/CSA/EN62368-1, 60950-1, CE Mark and UKCA Mark			

Immunity

Test	Standard	Test Level	Criteria	Notes
ESD	EN61000-4-2	±8kV air discharge, ±6kV contact discharge	B	See test report on website
Radiated Susceptibility	EN61000-4-3	3V/m	B	
Electrical Fast Transient Burst	EN61000-4-4	±2kV	B	
Surge	EN61000-4-5	±4kV common mode ±2kV differential mode	B	
Conducted Susceptibility	EN61000-4-6	3Vrms, 150kHz - 80 MHz	B	

Specifications

Model		FPS1000-12	FPS1000-24	FPS1000-32	FPS100048
Output					
Line Regulation	%	<0.4			
Load Regulation	%	<0.8			
Ripple & Noise	mV	See model selector			
Temperature Coefficient	%/°C	<0.02			
Minimum Load	-	No minimum load required			
Overcurrent Protection	%	104 - 125 of maximum output current			
Overvoltage Protection	V	See model selector			
Overtemperature Protection	-	Yes, automatic reset			
Remote Sense	-	Yes (must be connected for proper operation)			
Remote On/Off	-	ON = 0 - 0.6V or Short; OFF = 2 - 15 V or Open. Maximum sink current 2.6mA.			
DC OK	-	Open collector signal. On when Vout > 80 ±5% rated output. Max. sink current 10mA.			
AC Fail and Overtemperature warning		Open collector signal. Refer to Instruction Manual			
Standby Voltage	-	12V (11.2 - 12.5V) @ 0.25A isolated (always on)			
Indicators	-	AC OK, DC OK, DC Fail			
Parallel Operation	-	Up to eight FPS1000 units. Refer to Instruction Manual.			
Environmental					
Operating Temperature (non /P models)	°C	0 to +50 100% load, derate 2%/°C, 50 to 60, derate 2.5% /°C , 60 to 70			
Operating Temperature (/P models)	°C	0 to +50 100% load, derate 2%/°C, 50 to 60			
Storage Temperature	°C	-30 to +85			
Humidity (non condensing)	%RH	Operating: 10 - 90, Storage: 10 - 95			
Cooling	-	Internal variable speed fans. Airflow enters from the front.			
Altitude	m	3,000			
Withstand Voltage (For 1 minute)	-	Input to Ground 2kVac, Input to Output 3kVac, Output to Ground 500Vac.			
Isolation Resistance	MΩ	>100 at 25°C, 70%RH. Output to Ground 500Vdc			
Vibration (Non-operating)	-	Meets ETS 300 019			
Shock	-	Meets ETS 300 019			
Other					
Weight (Typ)	g	Power Supply: 2000, Rack: 3700			
Size (LxWxH)	mm	Power supply: 290 x 127 x 41 Rack: 351 x 483 x 43.6			
Size (LxWxH)	in	Power supply: 11.4 x 5 x 1.61 Rack: 13.8 x 19 x 1.72			
MTBF - JEITA	Hours	79,395			
Warranty	Years	2			

Notes
See website for detailed specifications, test methods and installation manual
(1) Via Trim pin on output connector
(2) 47 - 440Hz with reduced PFC (100 - 265Vac). Safety certified for AC input and 47-63Hz only

Outline Drawing FPS1000

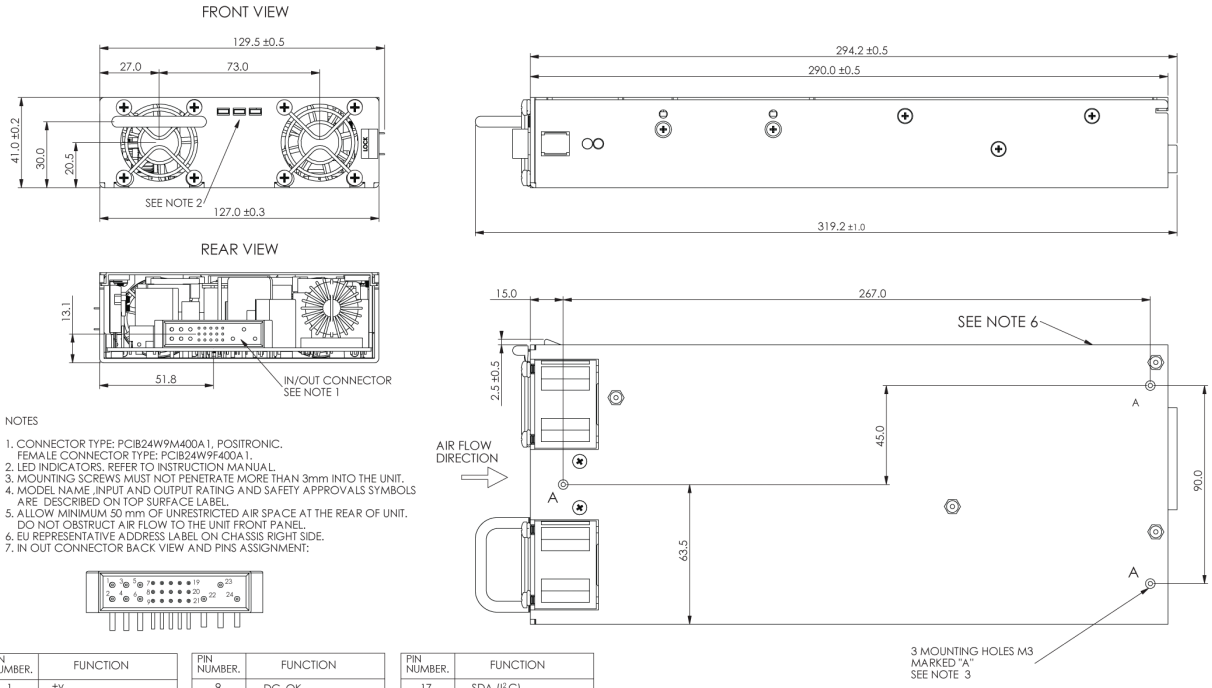

NOTES

1. CONNECTOR TYPE: PCIB24W9M400A1, POSITRONIC.
   FEMALE CONNECTOR TYPE: PCIB24W9F400A1.
2. LED INDICATORS. REFER TO INSTRUCTION MANUAL.
3. MOUNTING SCREWS MUST NOT PENETRATE MORE THAN 3mm INTO THE UNIT.
4. MODEL NAME ,INPUT AND OUTPUT RATING AND SAFETY APPROVALS SYMBOLS ARE DESCRIBED ON TOP SURFACE LABEL.
5. ALLOW MINIMUM 50 mm OF UNRESTRICTED AIR SPACE AT THE REAR OF UNIT. DO NOT OBSTRUCT AIR FLOW TO THE UNIT FRONT PANEL.
6. EU REPRESENTATIVE ADDRESS LABEL ON CHASSIS RIGHT SIDE.
7. IN OUT CONNECTOR BACK VIEW AND PINS ASSIGNMENT:

PIN NUMBER.	FUNCTION
1	+v
2	+v
3	-v
4	+v
5	-v
6	-v
7	ON/OFF
8	+S

PIN NUMBER.	FUNCTION
9	DC_OK
10	SIGNAL_RTN
11	AC_FAIL
12	TEMP_ALARM
13	-S
14	V_TRIM
15	CS
16	+12V_AUX

PIN NUMBER.	FUNCTION
17	SDA (I^2C)
18	SCL (I^2C)
19	A0 (I^2C)
20	A1 (I^2C)
21	A2 (I^2C)
22	ACG
23	ACL
24	ACN

Outline Drawing FPS1000/P

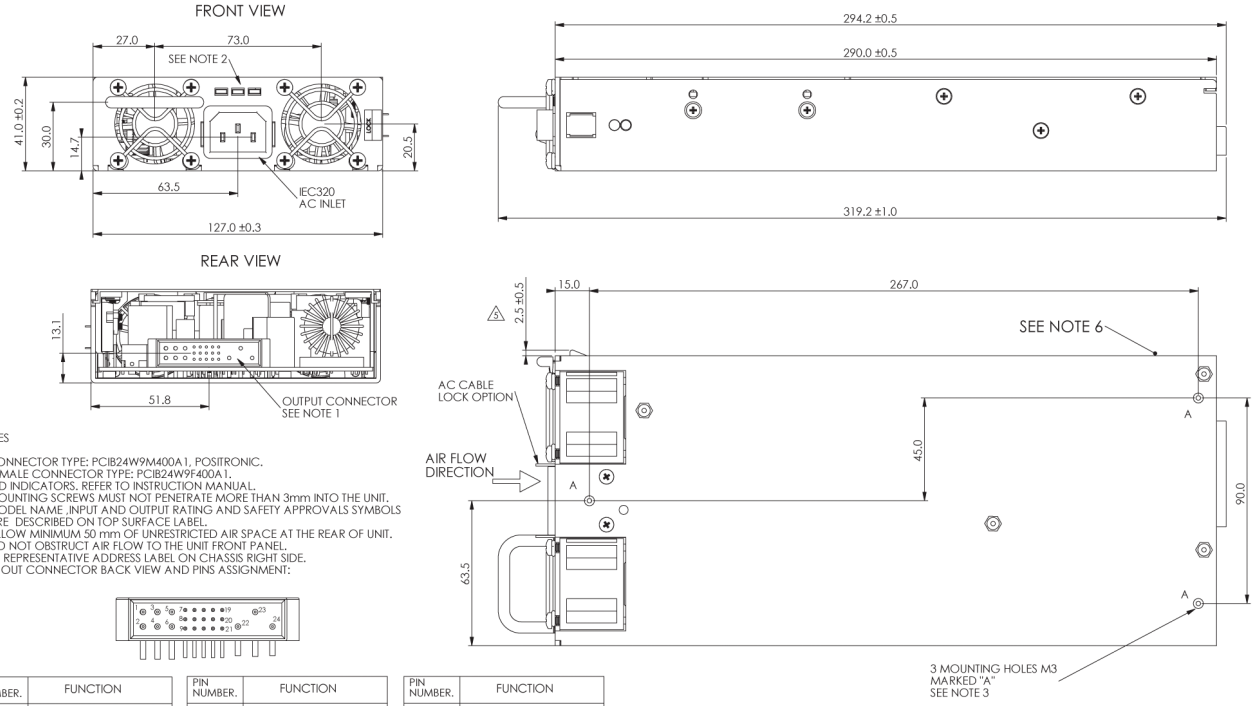

NOTES

1. CONNECTOR TYPE: PCIB24W9M400A1, POSITRONIC.
   FEMALE CONNECTOR TYPE: PCIB24W9F400A1.
2. LED INDICATORS. REFER TO INSTRUCTION MANUAL.
3. MOUNTING SCREWS MUST NOT PENETRATE MORE THAN 3mm INTO THE UNIT.
4. MODEL NAME ,INPUT AND OUTPUT RATING AND SAFETY APPROVALS SYMBOLS ARE DESCRIBED ON TOP SURFACE LABEL.
5. ALLOW MINIMUM 50 mm OF UNRESTRICTED AIR SPACE AT THE REAR OF UNIT. DO NOT OBSTRUCT AIR FLOW TO THE UNIT FRONT PANEL.
6. EU REPRESENTATIVE ADDRESS LABEL ON CHASSIS RIGHT SIDE.
7. IN OUT CONNECTOR BACK VIEW AND PINS ASSIGNMENT:

PIN NUMBER.	FUNCTION
1	+v
2	+v
3	-v
4	+v
5	-v
6	-v
7	ON/OFF
8	+S

PIN NUMBER.	FUNCTION
9	DC_OK
10	SIGNAL_RTN
11	AC_FAIL
12	TEMP_ALARM
13	-S
14	V_TRIM
15	CS
16	+12V_AUX

PIN NUMBER.	FUNCTION
17	SDA (I^2C)
18	SCL (I^2C)
19	A0 (I^2C)
20	A1 (I^2C)
21	A2 (I^2C)
22	NC
23	NC
24	NC

Outline Drawing FPS-S1U

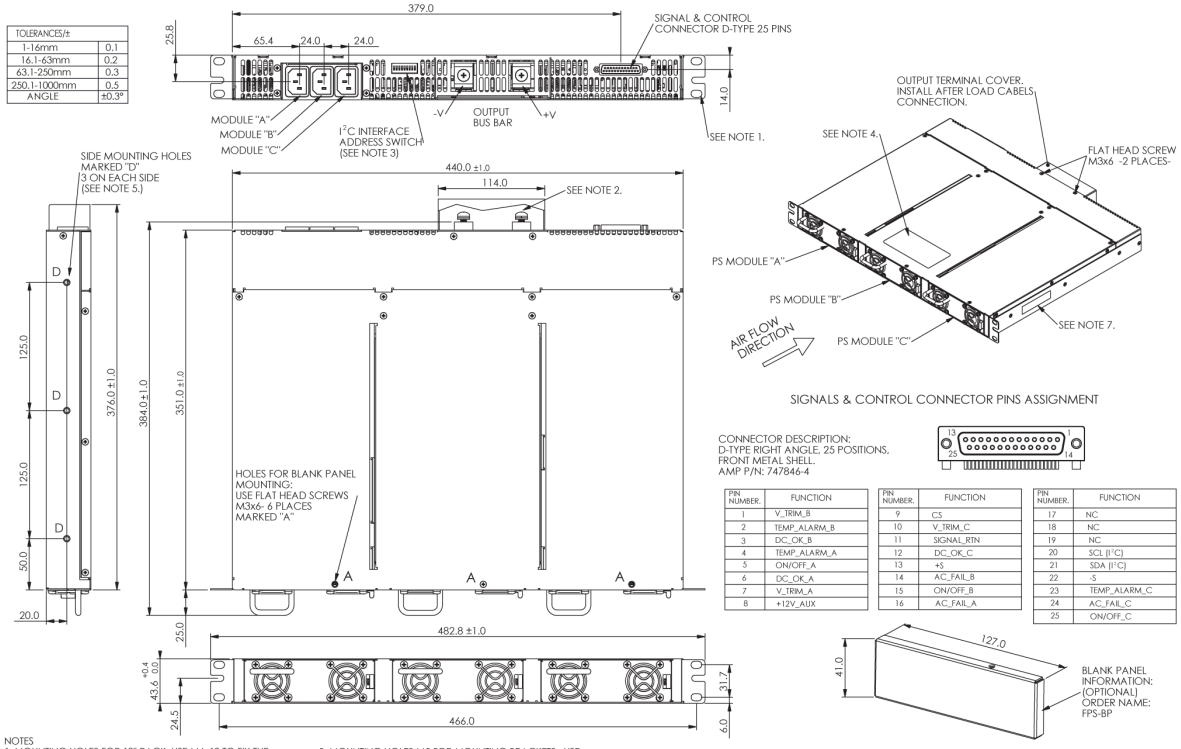

PIN NUMBER.	FUNCTION
1	V_TRIM_B
2	TEMP_ALARM_B
3	DC_OK_B
4	TEMP_ALARM_A
5	ON/OFF_A
6	DC_OK_A
7	V_TRIM_A
8	+12V_AUX

PIN NUMBER.	FUNCTION
9	CS
10	V_TRIM_C
11	SIGNAL_RTN
12	DC_OK_C
13	+S
14	AC_FAIL_B
15	ON/OFF_B
16	AC_FAIL_A

PIN NUMBER.	FUNCTION
17	NC
18	NC
19	NC
20	SCL (I²C)
21	SDA (I²C)
22	-S
23	TEMP_ALARM_C
24	AC_FAIL_C
25	ON/OFF_C

NOTES
1. MOUNTING HOLES FOR 19" RACK. USE M6x12 TO FIX THE UNIT TO A RACK.
2. M6x16 SCREWS FOR LOAD WIRES FIXING. USE M6 LUG FOR THE LOAD WIRES. RECOMMENDED TIGHTENING TORQUE 42~56 Kgf.cm
3. REFER TO INSTRUCTION MANUAL FOR SETTING DETAILS.
4. MODEL NAME , VOLTAGE AND CURRENT RATING AND SAFETY APPROVALS SYMBOLS WILL BE SHOWN HERE ACCORDING TO THE SPECIFICATIONS.
5. MOUNTING HOLES M5 FOR MOUNTING BRACKETS . USE M5x8 SCREWS TO FIX THE BRACKETS TO THE CHASSIS. SCREWS MUST NOT PENETRATE THE CHASSIS MORE THAN 6 mm.
6. THE FPS-S1U RACK IS SHOWN WITH 3 FPS1000 UNITS INSTALLED.
7. EU REPRESENTATIVE ADDRESS LABEL.

Outline Drawing FPS-S1U/P

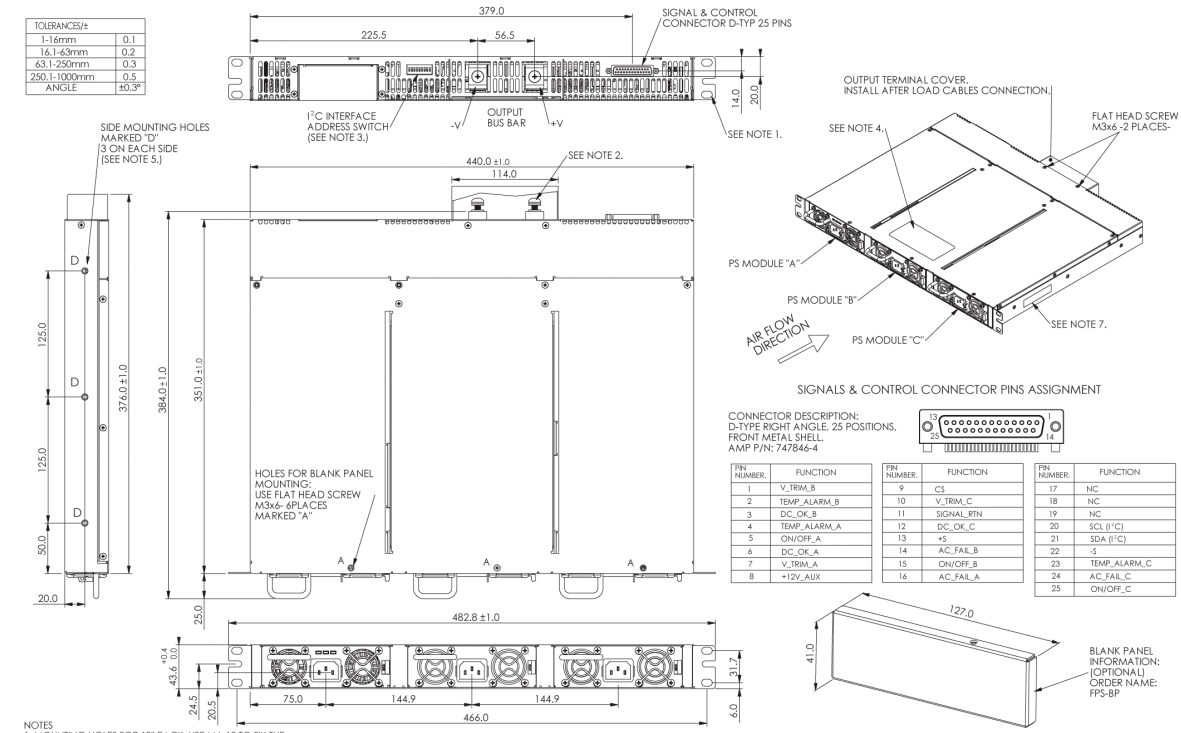

PIN NUMBER.	FUNCTION
1	V_TRIM_B
2	TEMP_ALARM_B
3	DC_OK_B
4	TEMP_ALARM_A
5	ON/OFF_A
6	DC_OK_A
7	V_TRIM_A
8	+12V_AUX

PIN NUMBER.	FUNCTION
9	CS
10	V_TRIM_C
11	SIGNAL_RTN
12	DC_OK_C
13	+S
14	AC_FAIL_B
15	ON/OFF_B
16	AC_FAIL_A

PIN NUMBER.	FUNCTION
17	NC
18	NC
19	NC
20	SCL (I²C)
21	SDA (I²C)
22	-S
23	TEMP_ALARM_C
24	AC_FAIL_C
25	ON/OFF_C

NOTES
1. MOUNTING HOLES FOR 19" RACK. USE M6x12 TO FIX THE UNIT TO A RACK.
2. M6x16 SCREWS FOR LOAD WIRES FIXING. USE M6 LUG FOR THE LOAD WIRES. RECOMMENDED TIGHTENING TORQUE 42~56 Kgf.cm
3. REFER TO INSTRUCTION MANUAL FOR SETTING DETAILS.
4. MODEL NAME , VOLTAGE AND CURRENT RATING AND SAFETY APPROVALS SYMBOLS WILL BE SHOWN HERE ACCORDING TO THE SPECIFICATIONS.
5. MOUNTING HOLES M5 FOR MOUNTING BRACKETS . USE M5x8 SCREWS TO FIX THE BRACKETS TO THE CHASSIS. SCREWS MUST NOT PENETRATE THE CHASSIS MORE THAN 6 mm.
6. THE FPS-S1U/P RACK IS SHOWN WITH 3 FPS1000/P UNITS INSTALLED.
7. EU REPRESENTATIVE ADDRESS LABEL.

Outline Drawing FPS-S1U/TB

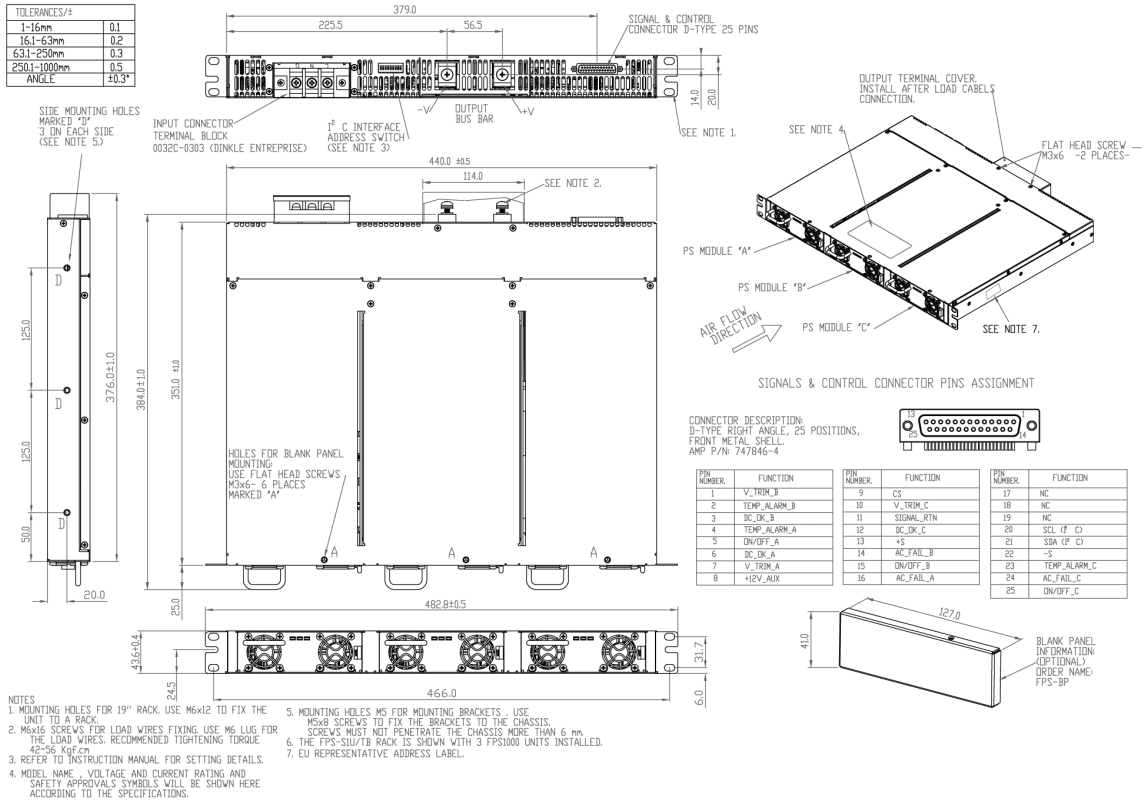

PIN NUMBER.	FUNCTION
1	V_TRIM_B
2	TEMP_ALARM_B
3	DC_OK_B
4	TEMP_ALARM_A
5	ON/OFF_A
6	DC_OK_A
7	V_TRIM_A
8	+12V_AUX

PIN NUMBER.	FUNCTION
9	CS
10	V_TRIM_C
11	SIGNAL_RTN
12	DC_OK_C
13	+S
14	AC_FAIL_B
15	ON/OFF_B
16	AC_FAIL_A

PIN NUMBER.	FUNCTION
17	NC
18	NC
19	NC
20	SCL (I² C)
21	SDA (I² C)
22	-S
23	TEMP_ALARM_C
24	AC_FAIL_C
25	ON/OFF_C

NOTES
1. MOUNTING HOLES FOR 19" RACK. USE M6x12 TO FIX THE UNIT TO A RACK.
2. M6x16 SCREWS FOR LOAD WIRES FIXING. USE M6 LUG FOR THE LOAD WIRES. RECOMMENDED TIGHTENING TORQUE 42~56 Kgf.cm
3. REFER TO INSTRUCTION MANUAL FOR SETTING DETAILS.
4. MODEL NAME , VOLTAGE AND CURRENT RATING AND SAFETY APPROVALS SYMBOLS WILL BE SHOWN HERE ACCORDING TO THE SPECIFICATIONS.
5. MOUNTING HOLES M5 FOR MOUNTING BRACKETS . USE M5x8 SCREWS TO FIX THE BRACKETS TO THE CHASSIS. SCREWS MUST NOT PENETRATE THE CHASSIS MORE THAN 6 mm.
6. THE FPS-S1U/TB RACK IS SHOWN WITH 3 FPS1000 UNITS INSTALLED.
7. EU REPRESENTATIVE ADDRESS LABEL.

Outline Drawing FPS-T1U

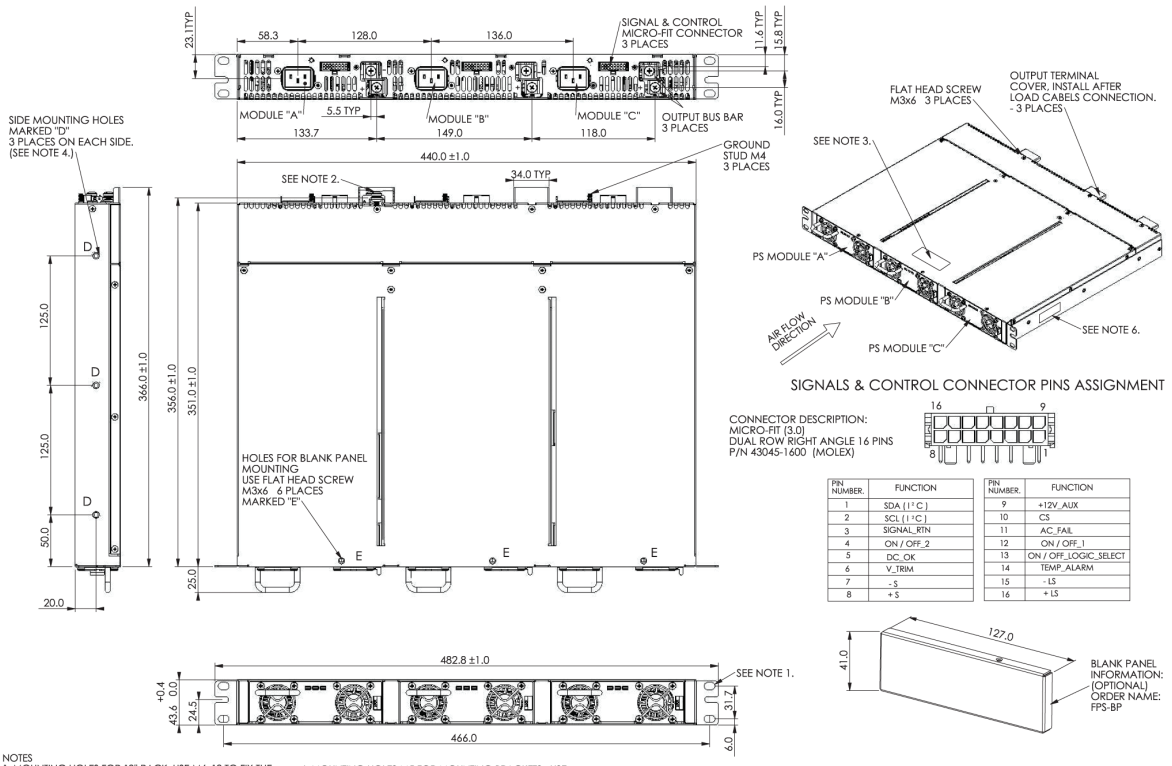

PIN NUMBER.	FUNCTION
1	SDA (I² C)
2	SCL (I² C)
3	SIGNAL_RTN
4	ON / OFF_2
5	DC_OK
6	V_TRIM
7	- S
8	+ S

PIN NUMBER.	FUNCTION
9	+12V_AUX
10	CS
11	AC_FAIL
12	ON / OFF_1
13	ON / OFF_LOGIC_SELECT
14	TEMP_ALARM
15	- LS
16	+ LS

NOTES
1. MOUNTING HOLES FOR 19" RACK. USE M6x12 TO FIX THE UNIT TO A RACK.
2. M5x12 SCREWS FOR LOAD WIRES FIXING. USE M5 LUG FOR THE LOAD WIRES. RECOMMENDED TIGHTENING TORQUE 24~31 Kgf.cm.
3. MODEL NAME , VOLTAGE AND CURRENT RATING AND SAFETY APPROVALS SYMBOLS WILL BE SHOWN HERE ACCORDING TO THE SPECIFICATIONS.
4. MOUNTING HOLES M5 FOR MOUNTING BRACKETS . USE M5x8 SCREWS TO FIX THE BRACKETS TO THE CHASSIS. SCREWS MUST NOT PENETRATE THE CHASSIS MORE THAN 6 mm.
5. THE FPS-T1U RACK IS SHOWN WITH 3 FPS1000 UNITS INSTALLED.
6. EU REPRESENTATIVE ADDRESS LABEL.

Outline Drawing FPS-T1U/P

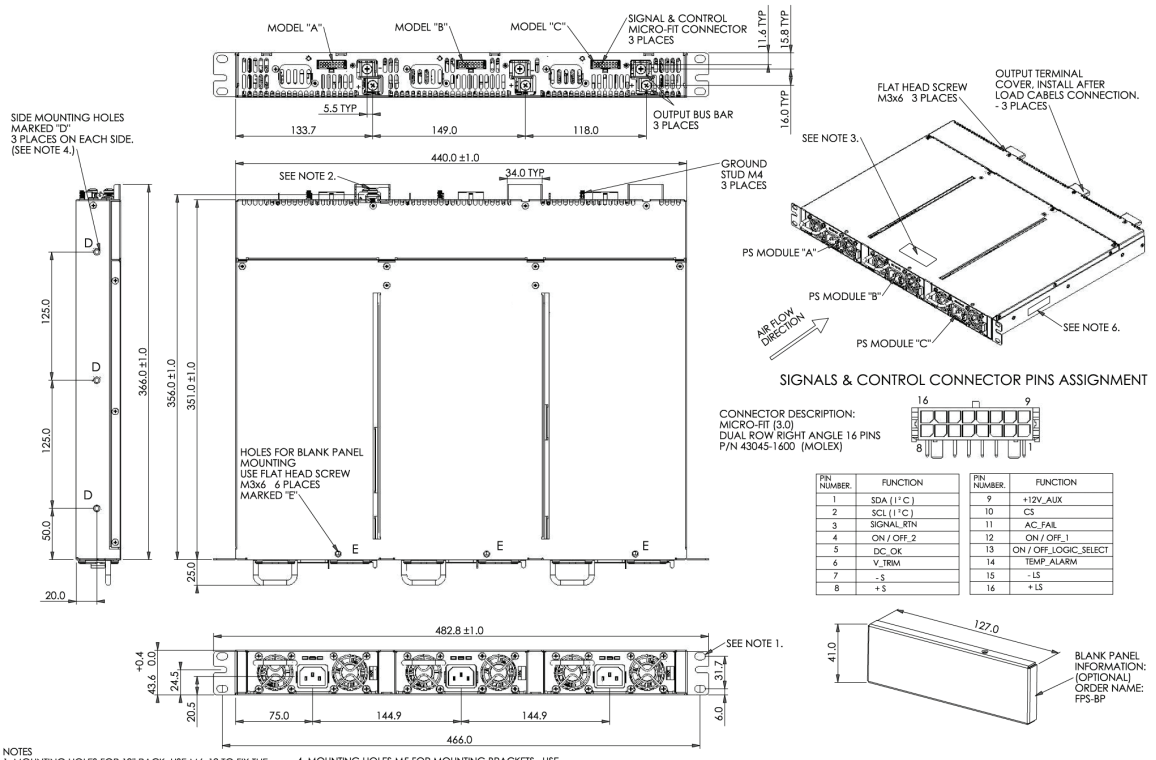

PIN NUMBER:	FUNCTION
1	SDA (I ² C)
2	SCL (I ² C)
3	SIGNAL_RTN
4	ON / OFF_2
5	DC_OK
6	V_TRIM
7	- S
8	+ S

PIN NUMBER:	FUNCTION
9	+12V_AUX
10	CS
11	AC_FAIL
12	ON / OFF_1
13	ON / OFF_LOGIC_SELECT
14	TEMP_ALARM
15	- LS
16	+ LS

NOTES
1. MOUNTING HOLES FOR 19" RACK. USE M6x12 TO FIX THE UNIT TO A RACK.
2. M5x12 SCREWS FOR LOAD WIRES FIXING. USE M5 LUG FOR THE LOAD WIRES. RECOMMENDED TIGHTENING TORQUE 24~31 Kgf.cm.
3. MODEL NAME , VOLTAGE AND CURRENT RATING AND SAFETY APPROVALS SYMBOLS WILL BE SHOWN HERE ACCORDING TO THE SPECIFICATIONS.
4. MOUNTING HOLES M5 FOR MOUNTING BRACKETS . USE M5x8 SCREWS TO FIX THE BRACKETS TO THE CHASSIS. SCREWS MUST NOT PENETRATE THE CHASSIS MORE THAN 6 mm.
5. THE FPS-T1U RACK IS SHOWN WITH 3 FPS1000 UNITS INSTALLED.
6. EU REPRESENTATIVE ADDRESS LABEL.

TDK-Lambda France SAS
Tel: +33 1 60 12 71 65
france@fr.tdk-lambda.com
www.emea.lambda.tdk.com/fr

Italy Sales Office
Tel: +39 02 61 29 38 63
info.italia@it.tdk-lambda.com
www.emea.lambda.tdk.com/it

Netherlands
info@nl.tdk-lambda.com
www.emea.lambda.tdk.com/nl

TDK-Lambda Germany GmbH
Tel: +49 7841 666 0
info@de.tdk-lambda.com
www.emea.lambda.tdk.com/de

Austria Sales Office
Tel: +43 2256 655 84
info@at.tdk-lambda.com
www.emea.lambda.tdk.com/at

Switzerland Sales Office
Tel: +41 44 850 53 53
info@ch.tdk-lambda.com
www.emea.lambda.tdk.com/ch

Nordic Sales Office
Tel: +45 8853 8086
info@dk.tdk-lambda.com
www.emea.lambda.tdk.com/dk

TDK-Lambda UK Ltd.
Tel: +44 (0) 12 71 85 66 66
info@uk.tdk-lambda.com
www.emea.lambda.tdk.com/uk

TDK-Lambda Ltd.
Tel: +9 723 902 4333
info@tdk-lambda.co.il
www.emea.lambda.tdk.com/il

C.I.S.
Commercial Support:
Tel: +7 (495) 665 2627
Technical Support:
Tel: +7 (812) 658 0463
info@tdk-lambda.ru
www.emea.lambda.tdk.com/ru

TDK-Lambda Americas
Tel: +1 800-LAMBDA-4 or 1-800-526-2324
powersolutions@us.tdk-lambda.com
www.us.lambda.tdk.com

TDK Electronics do Brasil Ltda
Tel: +55 11 3289-9599
sales.br@tdk-electronics.tdk.com
www.tdk-electronics.tdk.com/en

TDK-Lambda Corporation
Tel: +81-3-6778-1113
www.jp.lambda.tdk.com

TDK-Lambda (China) Electronics Co. Ltd.
Tel: +86 21 6485-0777
powersolutions@cn.tdk-lambda.com
www.lambda.tdk.com.cn

TDK-Lambda Singapore Pte Ltd.
Tel: +65 6251 7211
tls.mkt@sg.tdk-lambda.com
www.sg.lambda.tdk.com

TDK India Private Limited, Power Supply Division
Tel: +91 80 4039-0660
mathew.philip@in.tdk-lambda.com
www.sg.lambda.tdk.com

For Additional Information, please visit
https://product.tdk.com/en/power/

FPS1000_260854 February 9th, 2022 V1