ESD7104

ESD Protection Diode

Low Capacitance ESD Protection Diode for High Speed Data Line

The ESD7104 surge protection is designed to protect high speed data lines from ESD. Ultra−low capacitance and low ESD clamping voltage make this device an ideal solution for protecting voltage sensitive high speed data lines. The flow−through style package allows for easy PCB layout and matched trace lengths necessary to maintain consistent impedance between high speed differential lines such as USB 3.0 and HDMI.

Features

- Low Capacitance (0.3 pF Typical, I/O to GND)
- Low ESD Clamping Voltage
- Protection for the Following IEC Standards: IEC 61000−4−2 (Level 4)
- UL Flammability Rating of 94 V−0
- SZESD7104MTWTAG − Wettable Flank Package for optimal Automated Optical Inspection (AOI)
- SZ Prefix for Automotive and Other Applications Requiring Unique Site and Control Change Requirements; AEC−Q101 Qualified and PPAP Capable
- These Devices are Pb−Free, Halogen Free/BFR Free and are RoHS Compliant

Typical Applications

- USB 3.0
- eSATA 3.0
- Thunderbolt (Light Peak)
- HDMI 1.3/1.4
- Display Port

MAXIMUM RATINGS (T_J = 25°C unless otherwise noted)

Rating	Symbol	Value	Unit
Operating Junction Temperature Range	T_J	−55 to +125	°C
Storage Temperature Range	T_{stg}	−55 to +150	°C
Lead Solder Temperature − Maximum (10 Seconds)	T_L	260	°C
IEC 61000−4−2 Contact (ESD) IEC 61000−4−2 Air (ESD)	ESD ESD	±15 ±15	kV kV

Stresses exceeding those listed in the Maximum Ratings table may damage the device. If any of these limits are exceeded, device functionality should not be assumed, damage may occur and reliability may be affected.

See Application Note AND8308/D for further description of survivability specs.

This document contains information on some products that are still under development. ON Semiconductor reserves the right to change or discontinue these products without notice.

ON Semiconductor®

www.onsemi.com

MARKING DIAGRAM



UDFN10
CASE 517BB

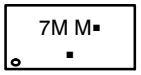

7M = Specific Device Code (tbd)
M = Date Code
▪ = Pb−Free Package
(Note: Microdot may be in either location)



WDFNW10
CASE 515AH

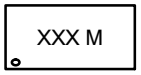

XX = Specific Device Code
M = Date Code

PIN CONFIGURATION AND SCHEMATIC

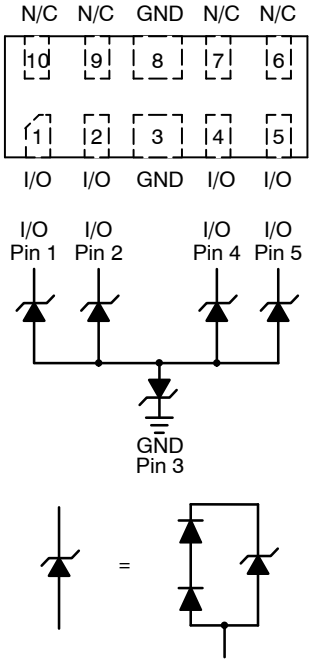

ORDERING INFORMATION

See detailed ordering, marking and shipping information in the package dimensions section on page 9 of this data sheet.

© Semiconductor Components Industries, LLC, 2016

ELECTRICAL CHARACTERISTICS (T_A = 25°C unless otherwise specified)

Parameter	Symbol	Conditions	Min	Typ	Max	Unit
Reverse Working Voltage	V_{RWM}	I/O Pin to GND			5.0	V
Breakdown Voltage	V_{BR}	I_T = 1 mA, I/O Pin to GND	5.5			V
Reverse Leakage Current	I_R	V_{RWM} = 5 V, I/O Pin to GND			1.0	μA
Clamping Voltage (Note 1)	V_C	I_{PP} = 1 A, I/O Pin to GND (8 x 20 μs pulse)			10	V
Clamping Voltage (Note 2)	V_C	IEC61000−4−2, ±8 KV Contact	See Figures 1 and 2			V
Clamping Voltage (Note 3)	V_C	I_{PP} = ±8 A I_{PP} = ±16 A		14.1 19.5		V
Junction Capacitance	C_J	V_R = 0 V, f = 1 MHz between I/O Pins		0.2	0.3	pF
Junction Capacitance	C_J	V_R = 0 V, f = 1 MHz between I/O Pins and GND		0.3	0.35	pF

Product parametric performance is indicated in the Electrical Characteristics for the listed test conditions, unless otherwise noted. Product performance may not be indicated by the Electrical Characteristics if operated under different conditions.

1. Surge current waveform per Figure 5.
2. For test procedure see Figures 3 and 4 and application note AND8307/D.
3. ANSI/ESD STM5.5.1 − 2008 Electrostatic Discharge Sensitivity Testing using Transmission Line Pulse (TLP) Model.
   TLP conditions: Z_0 = 50 Ω, t_p = 100 ns, t_r = 4 ns, averaging window; t_1 = 30 ns to t_2 = 60 ns.

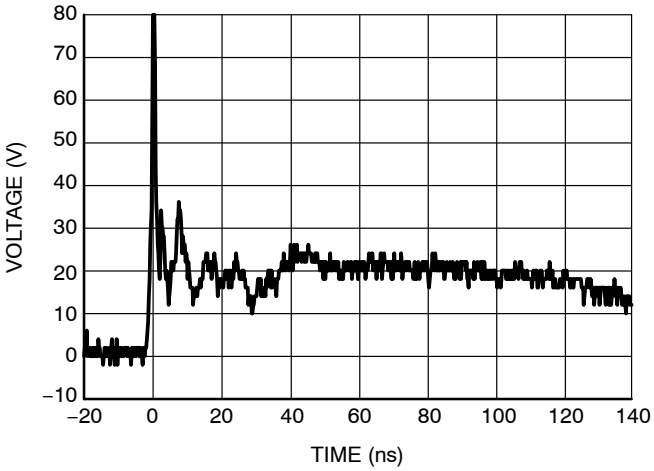

Figure 1. IEC61000−4−2 +8 KV Contact Clamping Voltage

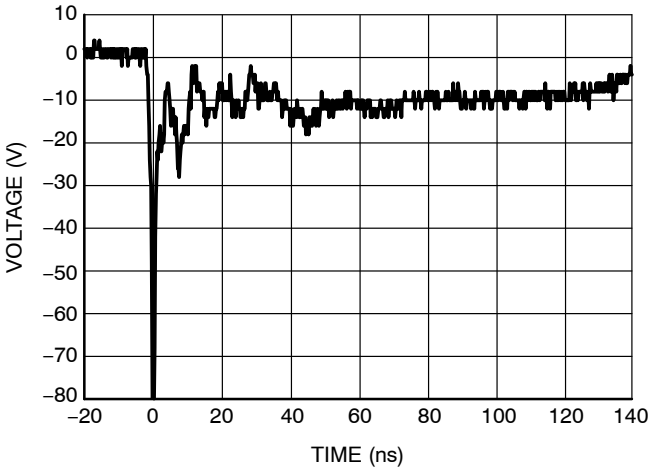

Figure 2. IEC61000−4−2 −8 KV Contact Clamping Voltage

IEC 61000−4−2 Spec.

Level	Test Voltage (kV)	First Peak Current (A)	Current at 30 ns (A)	Current at 60 ns (A)
1	2	7.5	4	2
2	4	15	8	4
3	6	22.5	12	6
4	8	30	16	8

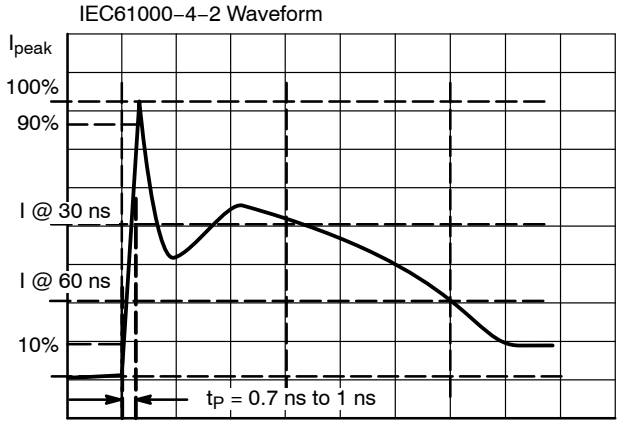

Figure 3. IEC61000−4−2 Spec

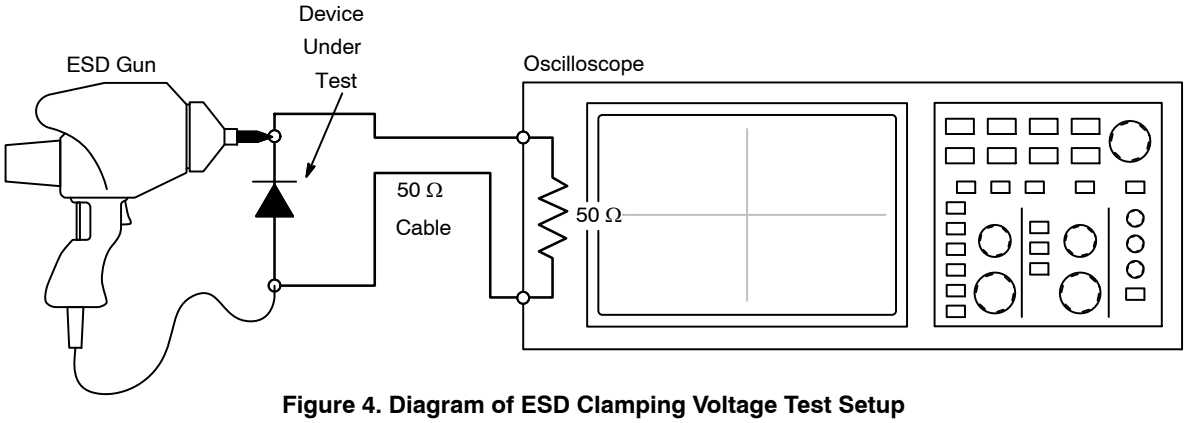

Figure 4. Diagram of ESD Clamping Voltage Test Setup

The following is taken from Application Note AND8308/D − Interpretation of Datasheet Parameters for ESD Devices.

ESD Voltage Clamping

For sensitive circuit elements it is important to limit the voltage that an IC will be exposed to during an ESD event to as low a voltage as possible. The ESD clamping voltage is the voltage drop across the ESD protection diode during an ESD event per the IEC61000−4−2 waveform. Since the IEC61000−4−2 was written as a pass/fail spec for larger systems such as cell phones or laptop computers it is not clearly defined in the spec how to specify a clamping voltage at the device level. ON Semiconductor has developed a way to examine the entire voltage waveform across the ESD protection diode over the time domain of an ESD pulse in the form of an oscilloscope screenshot, which can be found on the datasheets for all ESD protection diodes. For more information on how ON Semiconductor creates these screenshots and how to interpret them please refer to AND8307/D.

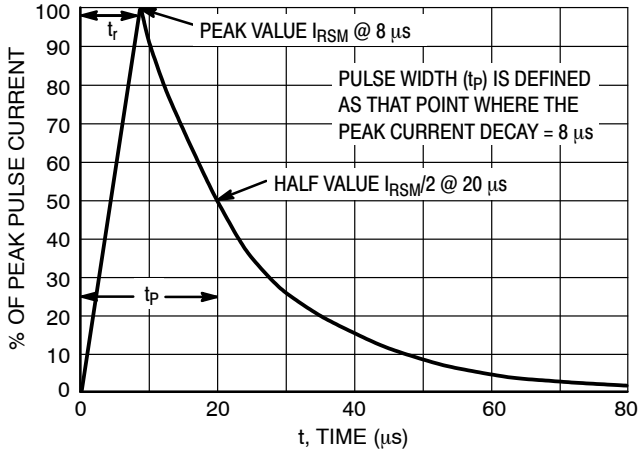

Figure 5. 8 x 20 μs Pulse Waveform

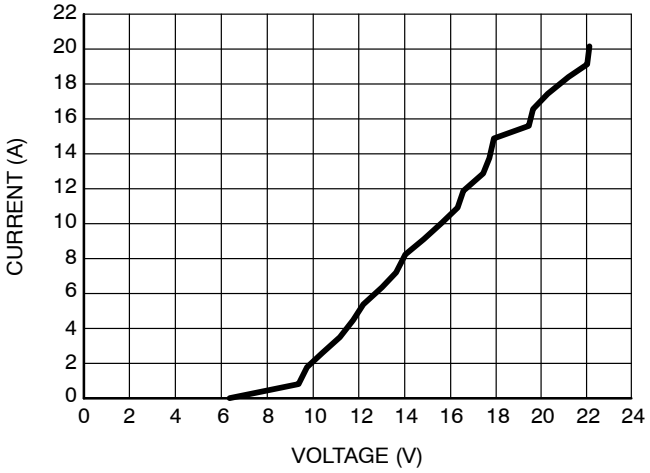

Figure 6. Positive TLP I–V Curve

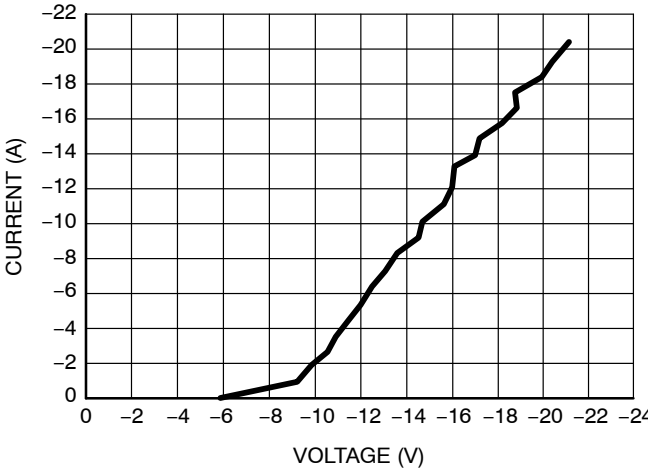

Figure 7. Negative TLP I–V Curve

Transmission Line Pulse (TLP) Measurement

Transmission Line Pulse (TLP) provides current versus voltage (I–V) curves in which each data point is obtained from a 100 ns long rectangular pulse from a charged transmission line. A simplified schematic of a typical TLP system is shown in Figure 8. TLP I–V curves of ESD protection devices accurately demonstrate the product's ESD capability because the 10s of amps current levels and under 100 ns time scale match those of an ESD event. This is illustrated in Figure 9 where an 8 kV IEC 61000−4−2 current waveform is compared with TLP current pulses at 8 A and 16 A. A TLP I–V curve shows the voltage at which the device turns on as well as how well the device clamps voltage over a range of current levels.

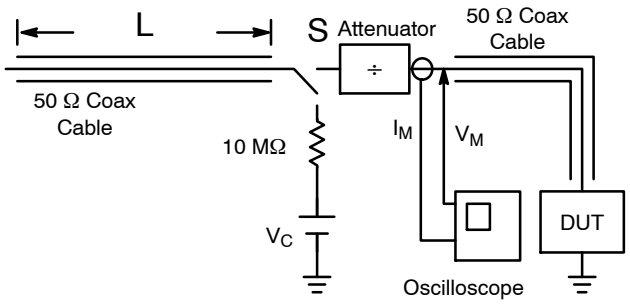

Figure 8. Simplified Schematic of a Typical TLP System

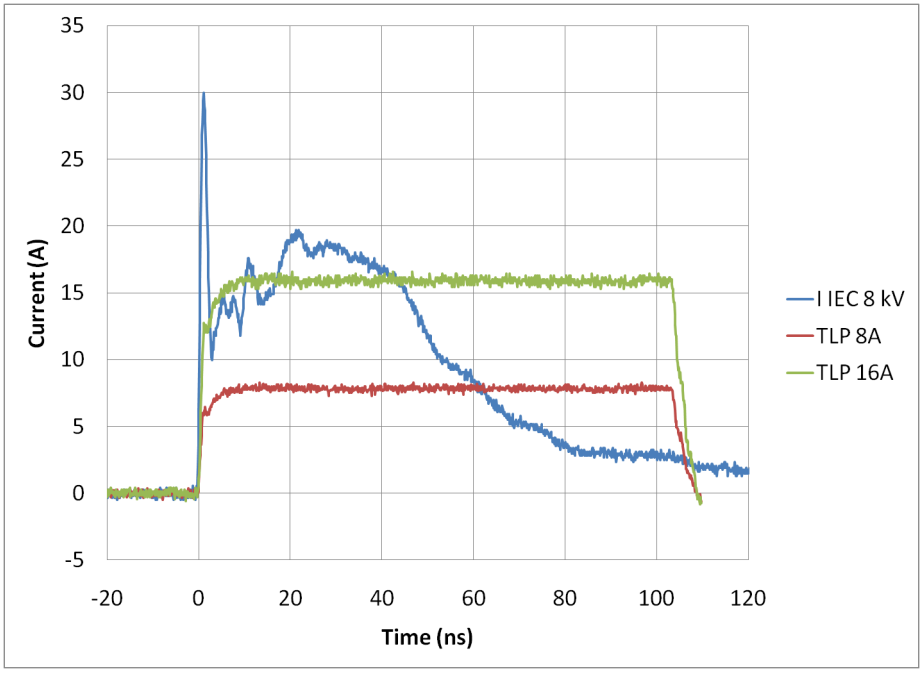

Figure 9. Comparison Between 8 kV IEC 61000−4−2 and 8 A and 16 A TLP Waveforms

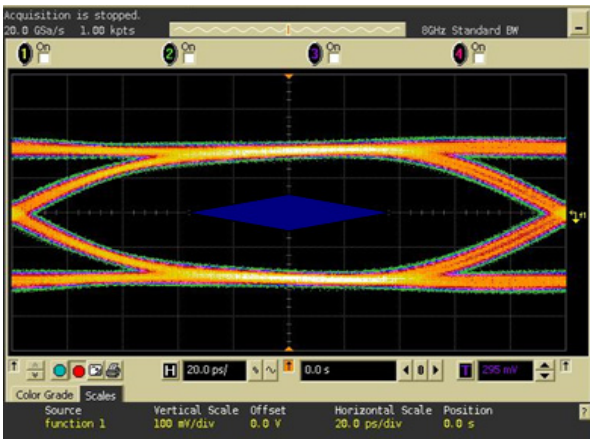

Without ESD

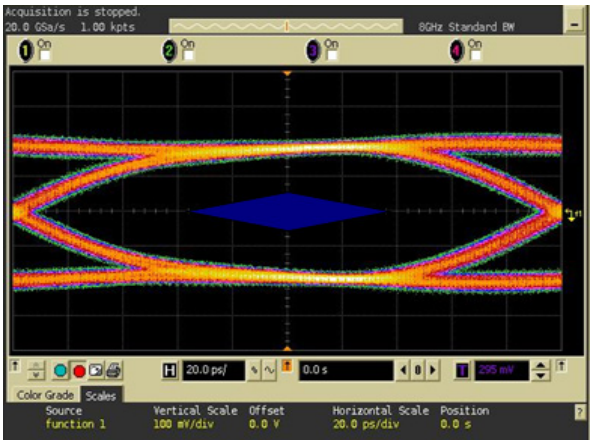

With ESD7104

Figure 10. USB3.0 Eye Diagram with and without ESD7104. 5.0 Gb/s, 400 mV_{PP}

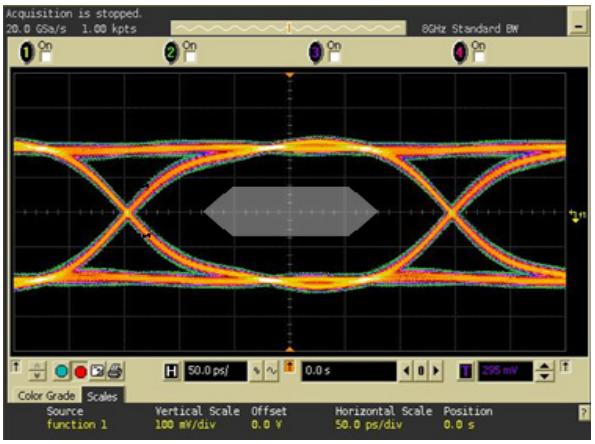

Without ESD

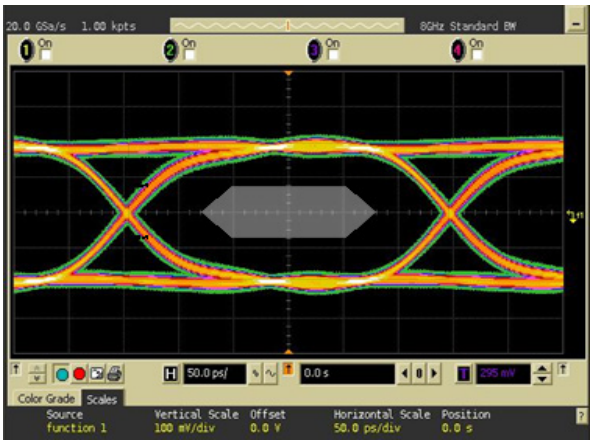

With ESD7104

Figure 11. HDMI1.4 Eye Diagram with and without ESD7104. 3.4 Gb/s, 400 mV_{PP}

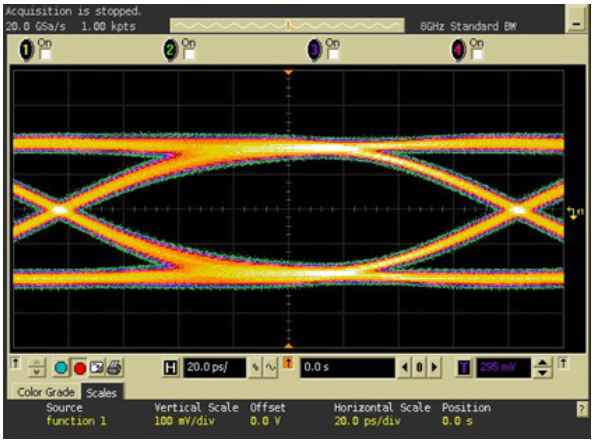

Without ESD

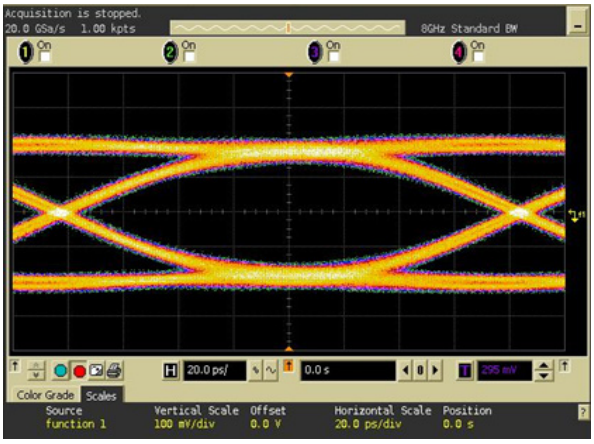

With ESD7104

Figure 12. ESATA3.0 Eye Diagram with and without ESD7104. 6 Gb/s, 400 mV_{PP}

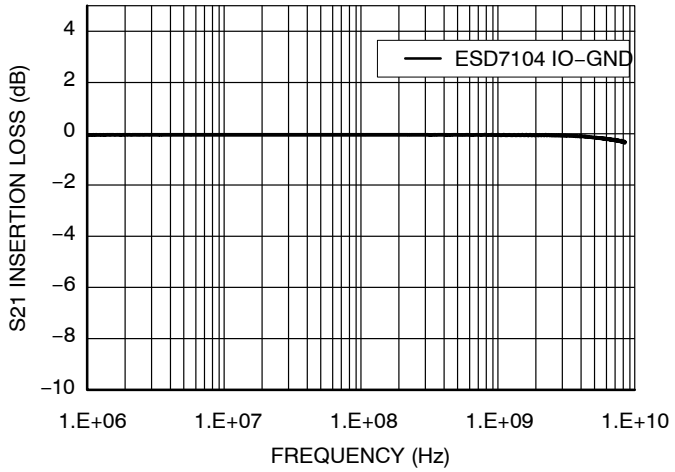

Figure 13. ESD7104 Insertion Loss

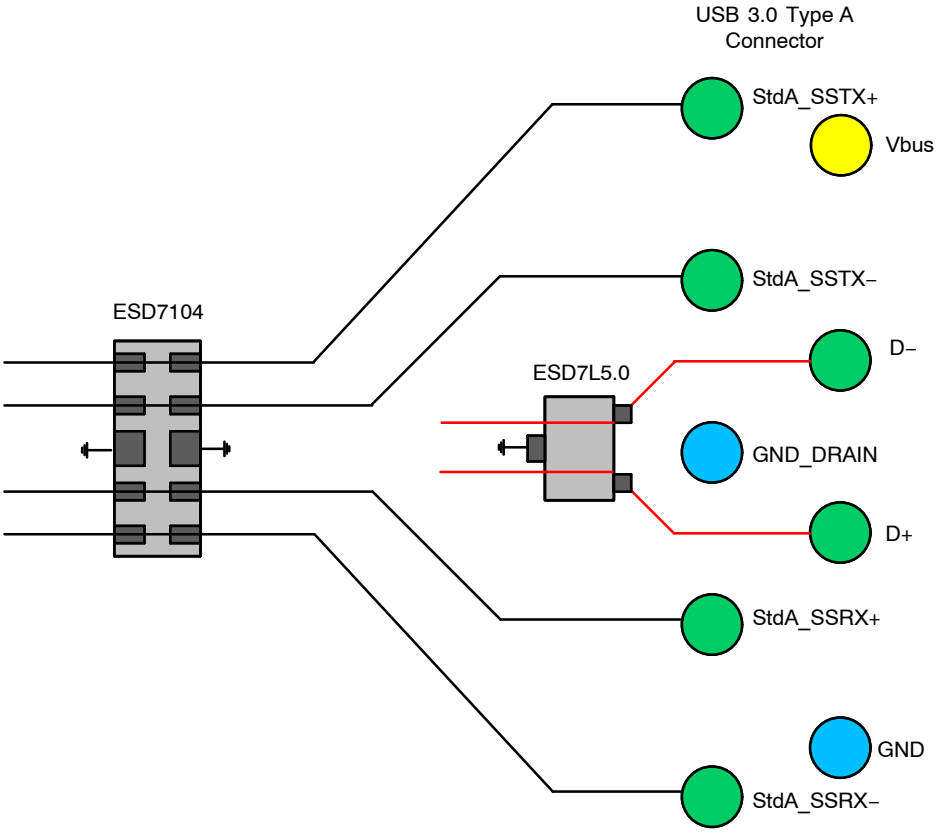

Figure 14. USB3.0 Standard A Connector Layout Diagram

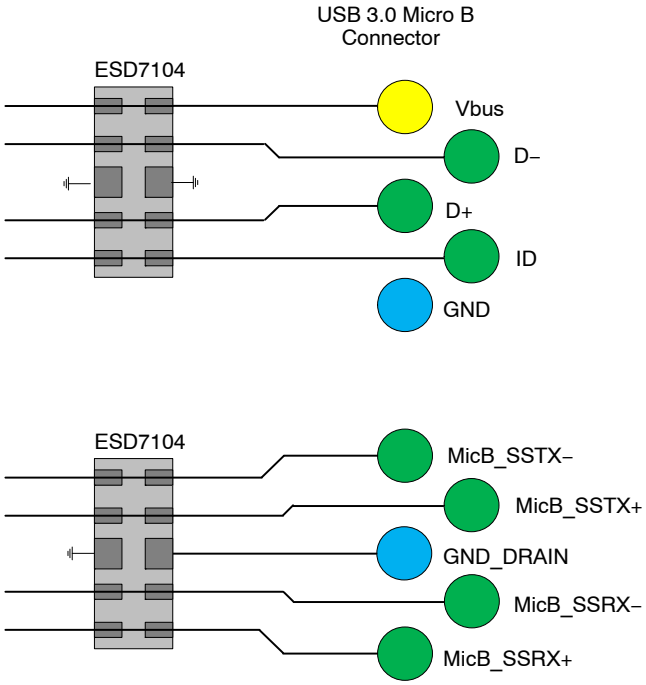

Figure 15. USB3.0 Micro B Connector Layout Diagram

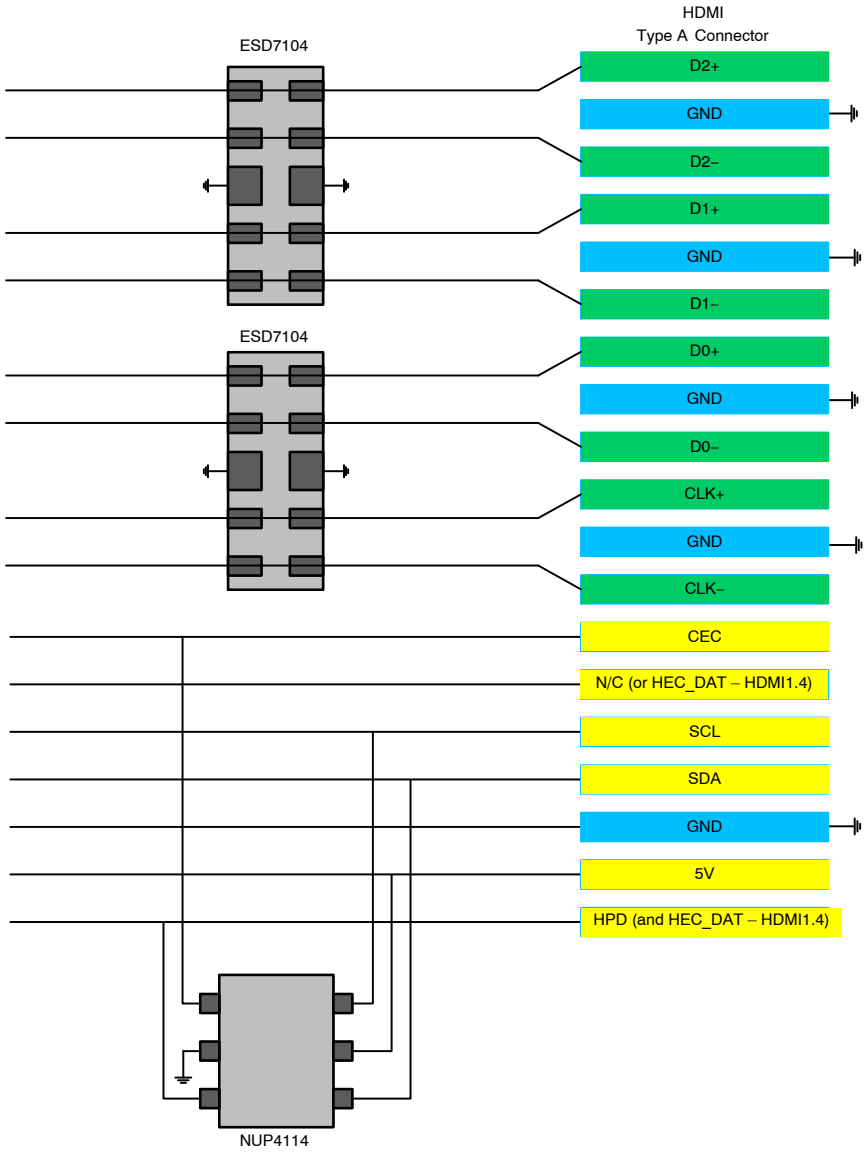

Figure 16. HDMI Layout Diagram

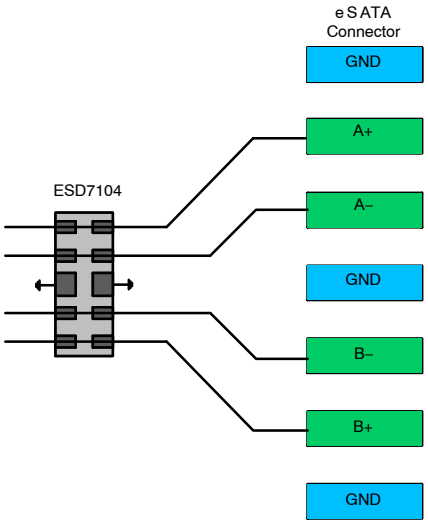

Figure 17. eSATA Layout Diagram

DEVICE ORDERING INFORMATION

Device	Marking	Package	Shipping†
ESD7104MUTAG	7M	UDFN10 (Pb−Free)	3000 / Tape & Reel
SZESD7104MUTAG	7M	UDFN10 (Pb−Free)	3000 / Tape & Reel
SZESD7104MTWTAG (In Development)	TBD	WDFNW10 (Pb−Free)	3000 / Tape & Reel

†For information on tape and reel specifications, including part orientation and tape sizes, please refer to our Tape and Reel Packaging Specifications Brochure, BRD8011/D.

PACKAGE DIMENSIONS

UDFN10 2.5 x 1, 0.5P
CASE 517BB
ISSUE O

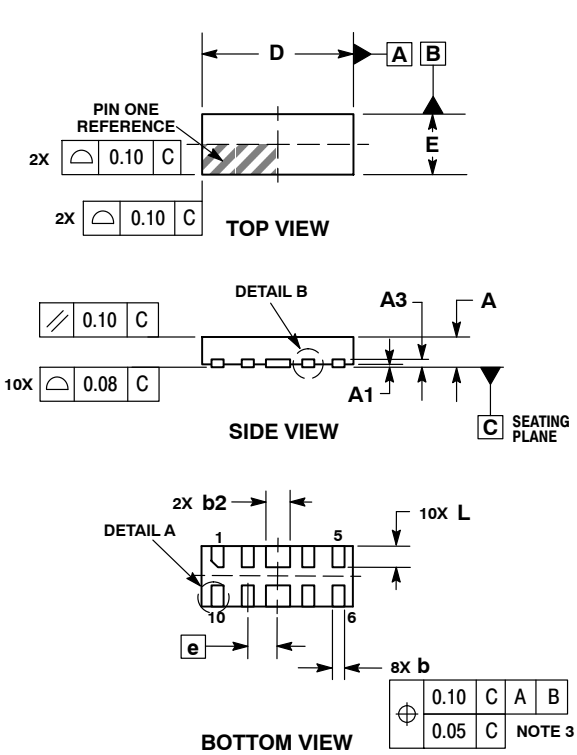

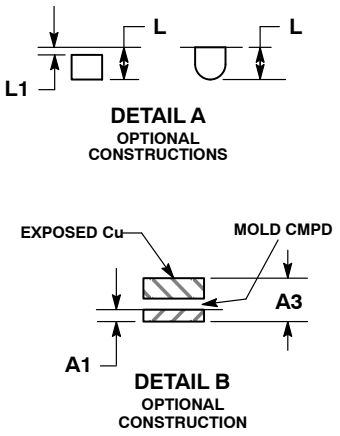

NOTES:
1. DIMENSIONING AND TOLERANCING PER ASME Y14.5M, 1994.
2. CONTROLLING DIMENSION: MILLIMETERS.
3. DIMENSION b APPLIES TO PLATED TERMINAL AND IS MEASURED BETWEEN 0.15 AND 0.30mm FROM TERMINAL.

	MILLIMETERS	
DIM	MIN	MAX
A	0.45	0.55
A1	0.00	0.05
A3	0.13 REF	
b	0.15	0.25
b2	0.35	0.45
D	2.50 BSC	
E	1.00 BSC	
e	0.50 BSC	
L	0.30	0.40
L1	---	0.05

RECOMMENDED SOLDERING FOOTPRINT*

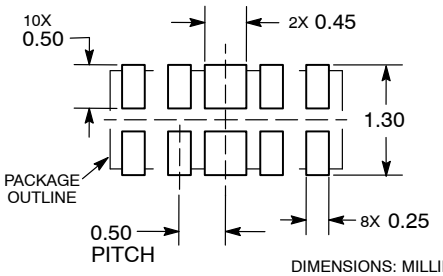

DIMENSIONS: MILLIMETERS

*For additional information on our Pb−Free strategy and soldering details, please download the ON Semiconductor Soldering and Mounting Techniques Reference Manual, SOLDERRM/D.

ESD7104

PACKAGE DIMENSIONS

WDFNW10 2.5x1.0, 0.5P
CASE 515AH
ISSUE O

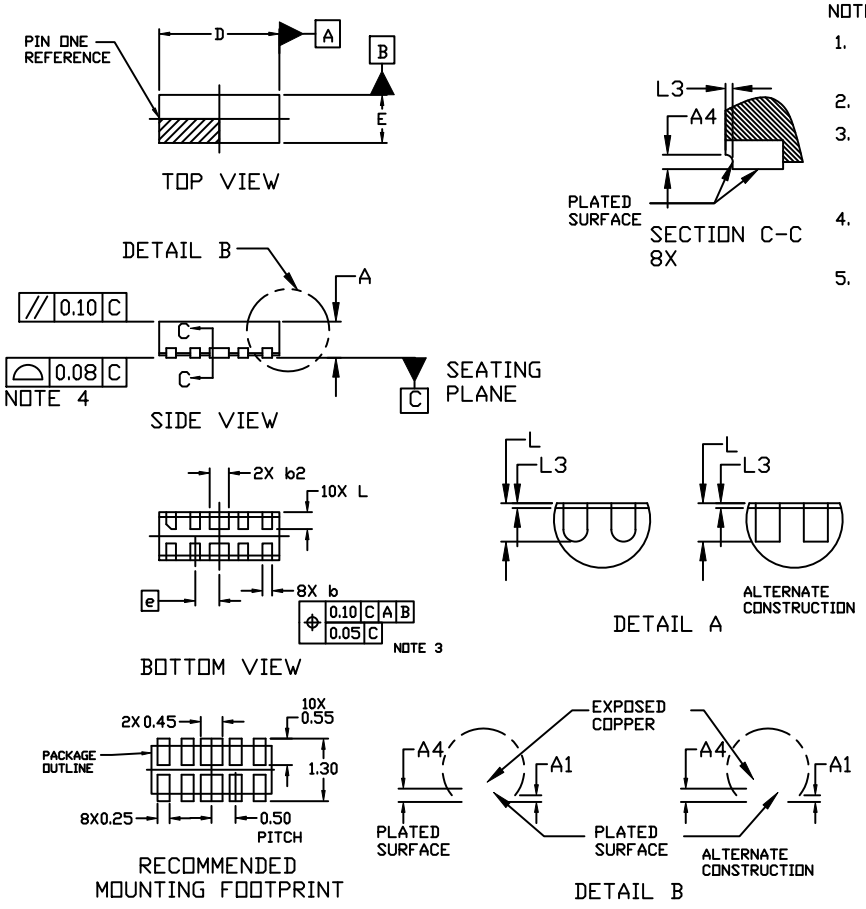

NOTES:

1. DIMENSIONING AND TOLERANCING PER ASME Y14.5M, 2009.
2. CONTROLLING DIMENSION: MILLIMETERS
3. DIMENSION b APPLIES TO PLATED TERMINALS AND IS MEASURED BETWEEN 0.15 AND 0.30MM FROM THE TERMINAL TIP.
4. COPLANARITY APPLIES TO THE EXPOSED PAD AS WELL AS THE TERMINALS.
5. THIS DEVICE CONTAINS WETTABLE FLANK DESIGN FEATURES TO AID IN FILLET FORMATION ON THE LEADS DURING MOUNTING.

	MILLIMETERS		
DIM	MIN.	NOM.	MAX.
A	0.70	0.75	0.80
A1	0.00	---	0.05
A3	0.13 REF		
A4	0.10	---	---
b	0.15	0.20	0.25
b2	0.35	0.40	0.45
D	2.40	2.50	2.60
E	0.90	1.00	1.10
e	0.50 BSC		
L	0.15	0.25	0.35
L3	---	---	0.10

* For additional information on our Pb-Free strategy and soldering details, please download the ON Semiconductor Soldering and Mounting Techniques Reference Manual, SOLDERRM/D.

ON Semiconductor and ON are trademarks of Semiconductor Components Industries, LLC dba ON Semiconductor or its subsidiaries in the United States and/or other countries. ON Semiconductor owns the rights to a number of patents, trademarks, copyrights, trade secrets, and other intellectual property. A listing of ON Semiconductor's product/patent coverage may be accessed at www.onsemi.com/site/pdf/Patent-Marking.pdf. ON Semiconductor reserves the right to make changes without further notice to any products herein. ON Semiconductor makes no warranty, representation or guarantee regarding the suitability of its products for any particular purpose, nor does ON Semiconductor assume any liability arising out of the application or use of any product or circuit, and specifically disclaims any and all liability, including without limitation special, consequential or incidental damages. Buyer is responsible for its products and applications using ON Semiconductor products, including compliance with all laws, regulations and safety requirements or standards, regardless of any support or applications information provided by ON Semiconductor. "Typical" parameters which may be provided in ON Semiconductor data sheets and/or specifications can and do vary in different applications and actual performance may vary over time. All operating parameters, including "Typicals" must be validated for each customer application by customer's technical experts. ON Semiconductor does not convey any license under its patent rights nor the rights of others. ON Semiconductor products are not designed, intended, or authorized for use as a critical component in life support systems or any FDA Class 3 medical devices or medical devices with a same or similar classification in a foreign jurisdiction or any devices intended for implantation in the human body. Should Buyer purchase or use ON Semiconductor products for any such unintended or unauthorized application, Buyer shall indemnify and hold ON Semiconductor and its officers, employees, subsidiaries, affiliates, and distributors harmless against all claims, costs, damages, and expenses, and reasonable attorney fees arising out of, directly or indirectly, any claim of personal injury or death associated with such unintended or unauthorized use, even if such claim alleges that ON Semiconductor was negligent regarding the design or manufacture of the part. ON Semiconductor is an Equal Opportunity/Affirmative Action Employer. This literature is subject to all applicable copyright laws and is not for resale in any manner.

PUBLICATION ORDERING INFORMATION

LITERATURE FULFILLMENT:
Literature Distribution Center for ON Semiconductor
19521 E. 32nd Pkwy, Aurora, Colorado 80011 USA
Phone: 303-675-2175 or 800-344-3860 Toll Free USA/Canada
Fax: 303-675-2176 or 800-344-3867 Toll Free USA/Canada
Email: orderlit@onsemi.com

N. American Technical Support: 800-282-9855 Toll Free USA/Canada
Europe, Middle East and Africa Technical Support:
Phone: 421 33 790 2910

ON Semiconductor Website: **www.onsemi.com**

Order Literature: http://www.onsemi.com/orderlit

For additional information, please contact your local Sales Representative

Mouser Electronics

Authorized Distributor

Click to View Pricing, Inventory, Delivery & Lifecycle Information:

ON Semiconductor:
SZESD7104MUTAG