REVISIONS					
REV.	ECN NO.	LOCATION	DESCRIPTION	DATE	DESIGN
A0	N/A		INITIAL RELEASE	/	/
A1	N/A		图面升级整理图面	2025.06.25	阿树

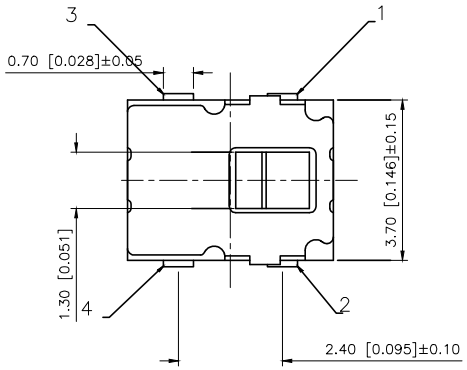

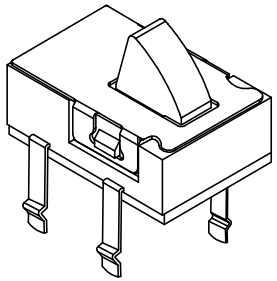

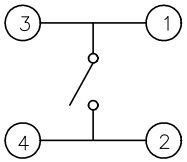

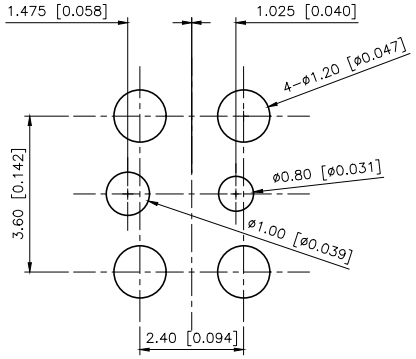

PCB Layout

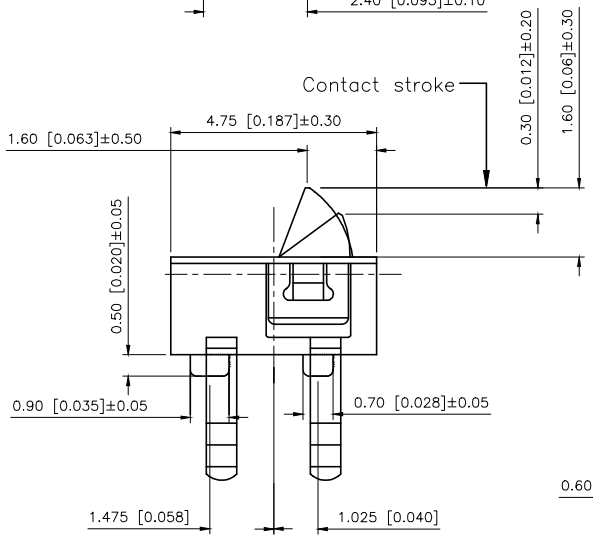

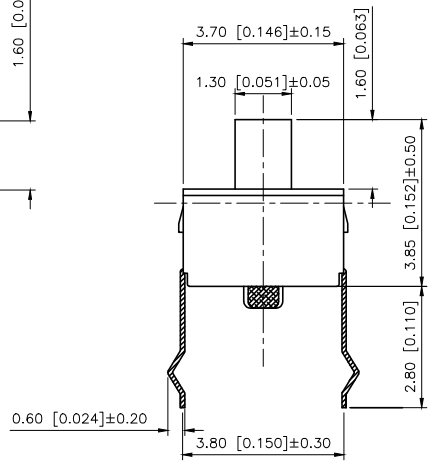

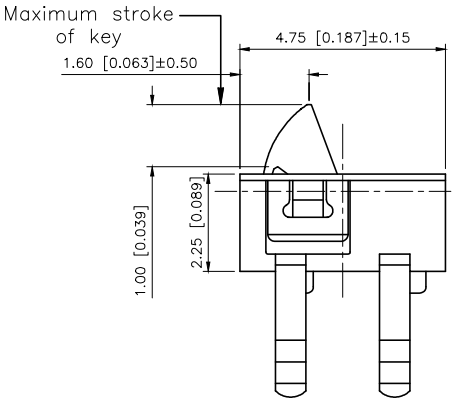

PART NO.	
TM-8764A-1	TM-8764A-2

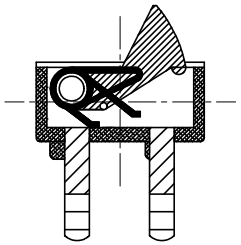

ITEM	PAPT NAMF	QTY	MATERIAL	FINISHING
⑤	Contact Spring	1	Phosphor Bronze	Plating silver
④	Terminal	4	Phosphor Bronze	Plating silver
③	Base	1	Lcp	
②	Cover	1	Sus	Natural
①	Keystake	1	Nylon	

NOTE:
Rating:DC 30V 0.1A
Operating Force: 30±10gf
Lifetime:100,000 Cycles

AuGLAR	±5°
X.	±0.40
X.x	±0.30
X.xx	±0.20
X.xxx	±0.15
UNSPECIFIED TOLERAuCES	

XKB Connection 星科

DESIGN	阿树	VIEW:	MODEL TYPE: DETECT SWITCH
CHECKED		UNIT: mm/in	PART NO.: TM-8764A-2
APPROVED		SIZE: A4	DWG NO.: X-TM-8764A-2

XKB INDUSTRIAL PRECISION CO.,LIMITED

SCALE	PAGE	REVISION
N/A	1/1	A1

www.helloxkb.com www.helloxkb.cn www.xk-dg.cn