Downloaded from Arrow.com.

SIGN	DATE	DESCRIPTION	APPROVER
2	2012.10.03	USB 2.0 detail added	SHIN

THIS IS CAD DRAWING, DO NOT REVISE MANUALLY!!!

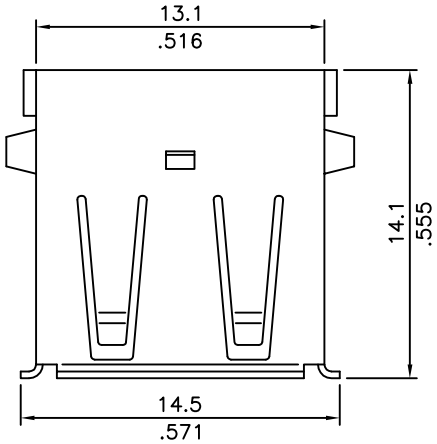

Material

- Insulator: Glass Filled Polyester
- Flammability: UL94V-0
- Contacts: Phosphor Bronze
- Contact Plating: See options
- Shell: Brass
- Shell Plating: 80 Ni over 40u" Cu

Ratings

- Current: 1A
- Voltage: 30V AC(r.m.s.)
- Contact Res: <30mΩ
- Insulation Res: >1,000 MΩ
- Operating Temp: 0° - +85°
- Storage Temp: -40° - +60°

RoHS Compliant

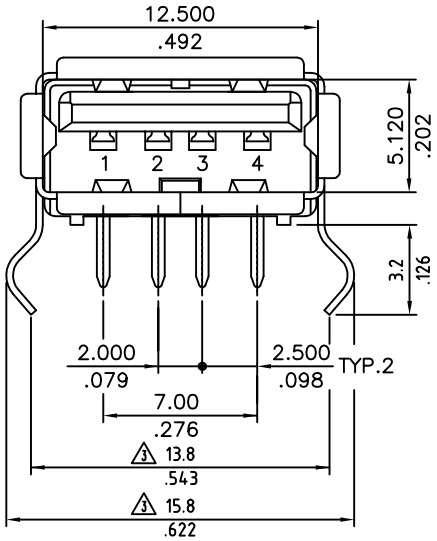

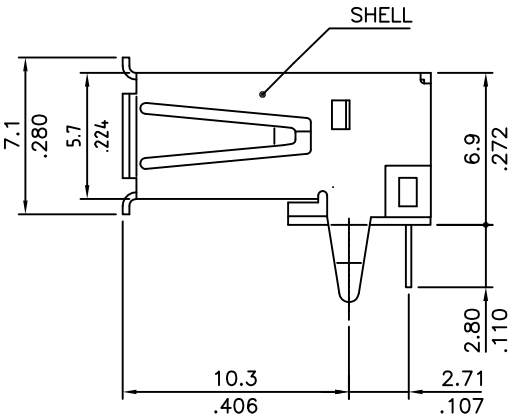

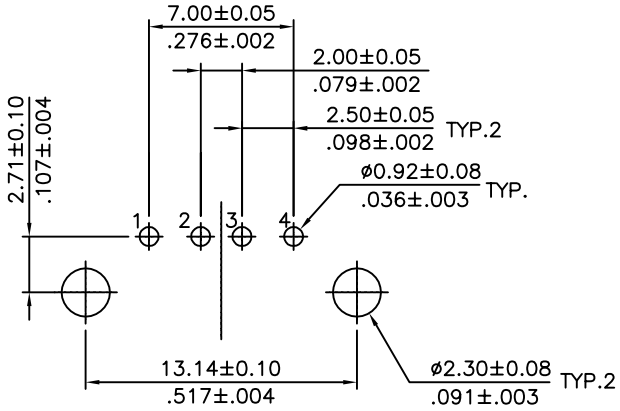

Recommmended P.C. Board Layout

PART NUMBER:

USB-A1HSXX

COLOR:
B: Black
W: White

PLATING: 2
6: Selective Au Flash/50u" Ni
8: Selective 30u" Au/50u" Ni (USB 2.0)

THESE DRAWINGS AND SPECIFICATIONS ARE THE PROPERTY OF ON-SHORE TECHNOLOGY, INC. AND SHALL NOT BE REPRODUCED, COPIED OR USED IN ANY MANNER WITHOUT THE PRIOR WRITTEN CONSENT OF ON-SHORE TECHNOLOGY, INC.

ON-SHORE TECHNOLOGY, INC.

TITLE	USB - A type, Horizontal, thru hole				
PART NO.	USB-A1HSXX		DWG NO.	USB-A1HSXX.DWG	
APPROVED	CHECKED	DESIGNED	DRAWN	4050	Tolerance
	Marvin 2002.03.12	Marvin 2002.03.12	Marvin 2002.03.12	UNIT: mm/inches SCALE: NONE SHEET: 01/01 REV.: A	X.° ±1° X.X ±0.30/.012 X.XX ±0.20/.008 X.XXX ±0.10/.004