REVISIONS					
REV.	ECN NO.	LOCATION	DESCRIPTION	DATE	DESIGN
A0	N/A		INITIAL RELEASE	/	/
A1	N/A		料号解析变更,图面升级整理图面	2024.11.20	阿树

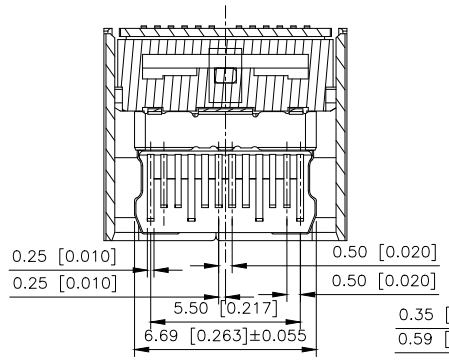

SECTION B–B
SCALE 1:1

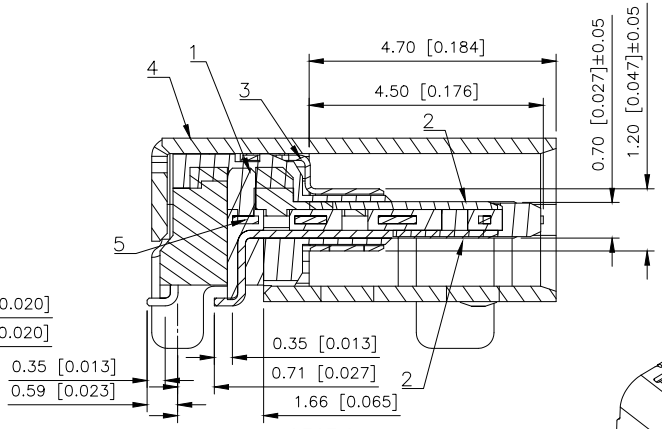

SECTION A–A
SCALE 2:1

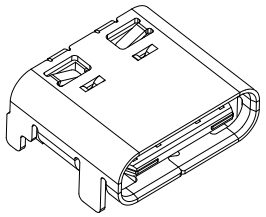

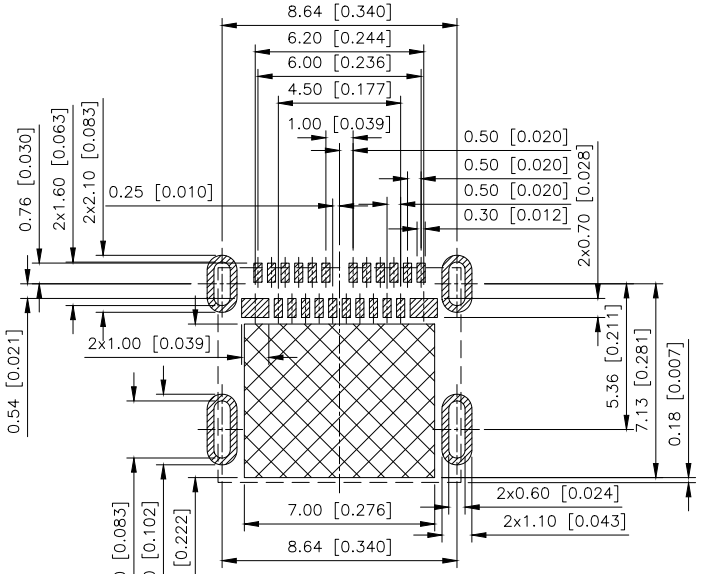

PCB LAYOUT

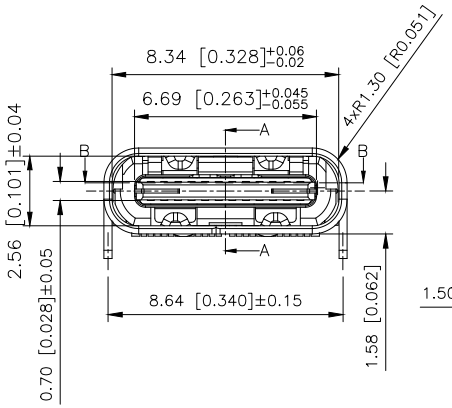

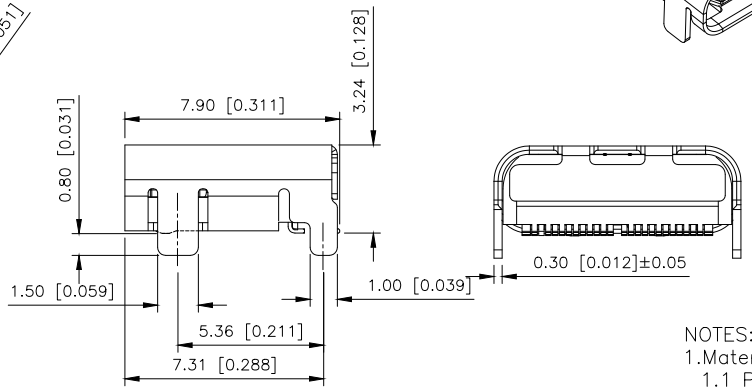

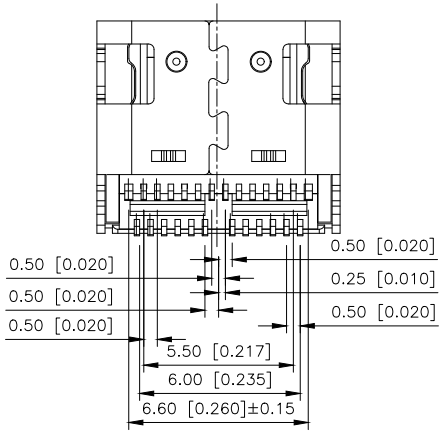

U262–241N–4BVC21

1:AU 1U''Min
2:AU 3U''Min
3:AU 5U''Min
4:AU 10U''Min
5:AU 15U''Min
6:AU 30U''Min

1:PBT
2:PA6T
3:PA9T
4:LCP

W:WHITE
B:BLACK

NOTES:
1.Material:
1.1 Plastic core: LCP+30%G.F
1.2 Terminal: C18140, T=0.15mm; Nickel base,gold plated
1.3 shell: SUS, T=0.30mm; Nickel plated on the surface
1.4 shell fragment: SUS, T=0.15mm;
2. ELECTRICAL CHARACTERISTIC:
2.1 Rated current: 5A
2.2 Contact resistance: 40mΩ MAX
2.3 Insulation resistance: 100MΩ MIN 250V DC
2.4 WITHSTANDING VOLTAGE: 100V AC
2.5Tinning: Temperature:245±5C, Time:5±0.5s2.6
INSERTION FORCE: 2.0kgf MAX
EXTRACTION FORCE:0.6kgf MIN
2.7 Service life: 10.000次
2.8 Operating temperature: −40℃~+80℃

PIN	SIGNAL NAME	PIN	SIGNAL NAME
A1	GND	B12	GND
A2	SSTXP1	B11	SSRXP1
A3	SSTXN1	B10	SSRXN1
A4	VBUS	B9	VBUS
A5	CC1	B8	SBU2
A6	DP1	B7	DN2
A7	DN1	B6	DP2
A8	SBU1	B5	CC2
A9	VBUS	B4	VBUS
A10	SSRXN2	B3	SSTXN2
A11	SSRXP2	B2	SSTXP2
A12	GND	B1	GND

AuGLAR	±5°
X.	±0.40
X.x	±0.30
X.xx	±0.20
X.xxx	±0.15
UNSPECIFIED TOLERAuCES	

XKB Connection 星创

DESIGN	阿树	VIEW:	MODEL TYPE: USB TYPE C SMT–24PIN PLUG
CHECKED		UNIT: mm/in	PART NO.: U262–241N–4BVC21
APPROVED		SIZE: A4	DWG NO.:

XKB INDUSTRIAL PRECISION CO.,LIMITED

SCALE	PAGE	REVISION
N/A	1/1	A1