REVISIONS					
REV.	ECN NO.	LOCATION	DESCRIPTION	DATE	DESIGN
A0	N/A		INITIAL RELEASE	/	/
A1	N/A		图面升级整理图面	2025.07.01	阿树

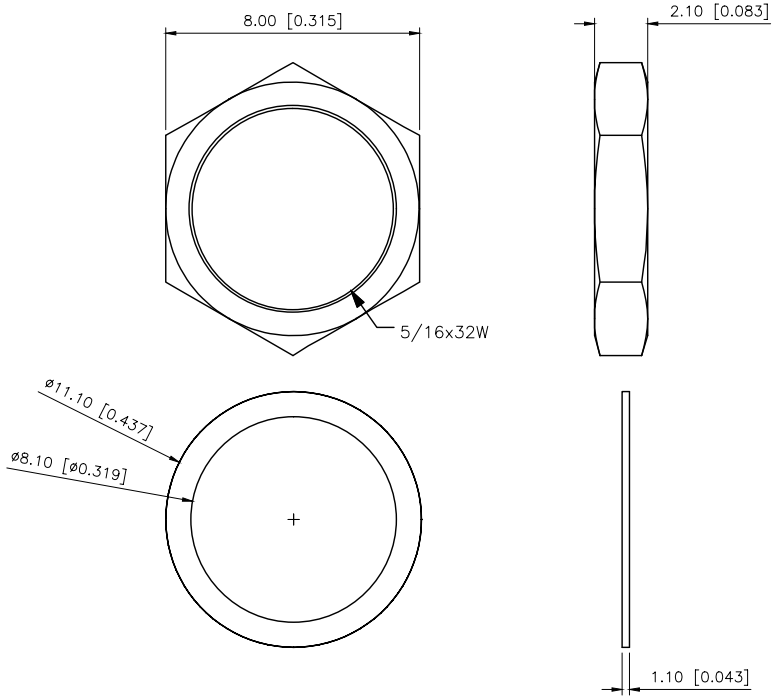

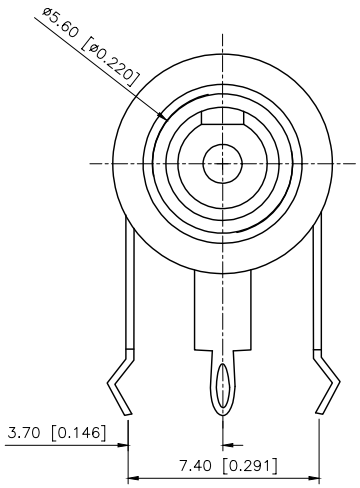

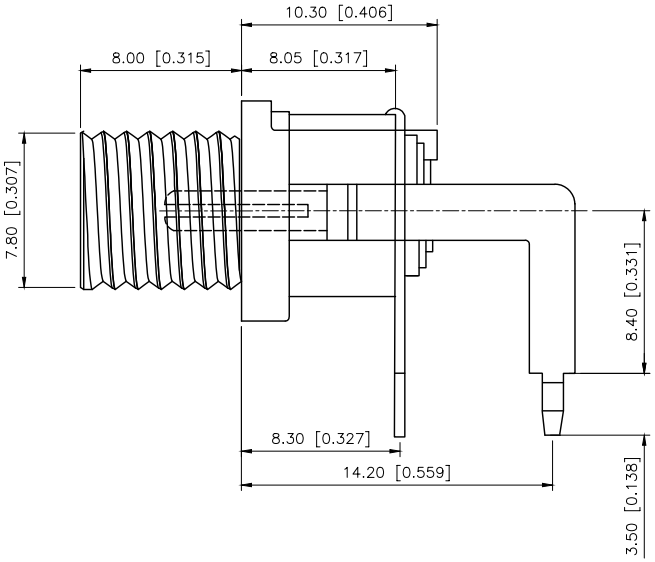

SCHEMATIC	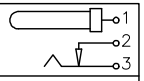
Model	DC-026LBM
Center Pin	Ø2.0 mm
	Ø2.5 mm

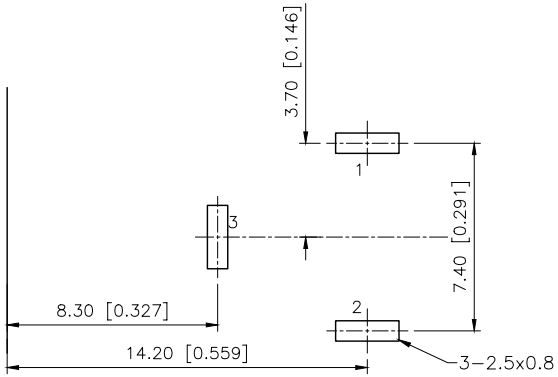

P.C.B LAYOUT (top view)

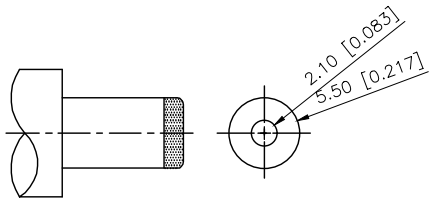

MATING PLUG
Jack Insertion Depth: 9.0 mm

Terminal 3	Phosphor Bronze	Tin
Terminal 2	Brass	Tin
Terminal 1	Brass	Tin
Center pin	Brass	Tin
Plastic	PBT	
Axle sleeve	Brass	Tin
PAPT NAMF	MATERIAL	PLATING

AuGLAR	±5°
X.	±0.40
X.x	±0.30
X.xx	±0.20
X.xxx	±0.15
UNSPECIFIED TOLERAuCES	

XKB Connection

DESIGN	阿树	VIEW:	MODEL TYPE: DC POWER JACK
CHECKED		UNIT: mm/in	PART NO.: DC-026LBM-5A-2.0
APPROVED		SIZE: A4	DWG NO.: DC-026LBM-5A-2.0

XKB INDUSTRIAL PRECISION CO.,LIMITED

SCALE	PAGE	REVISION
N/A	1/1	A1

www.helloxkb.com www.helloxkb.cn www.xk-dg.cn