REVISIONS					
REV.	ECN NO.	LOCATION	DESCRIPTION	DATE	DESIGN
A0	N/A		INITIAL RELEASE	/	/
A1	N/A		图面升级整理图面	2025.06.04	阿树

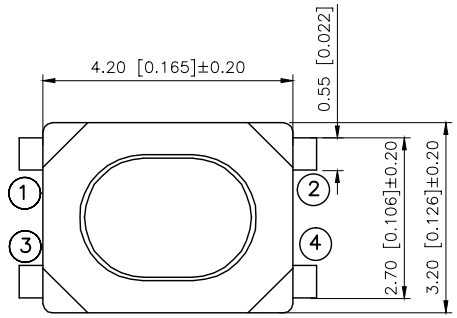

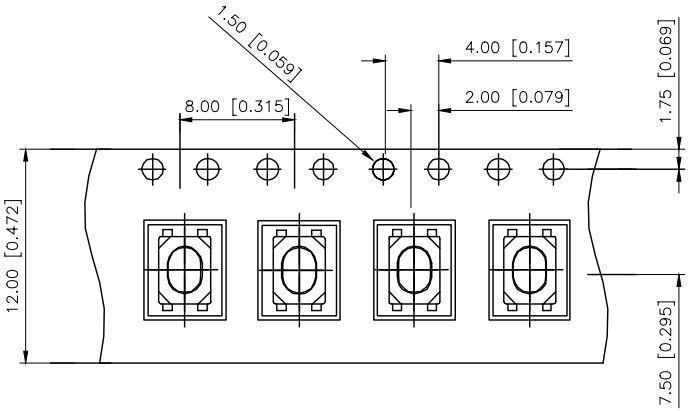

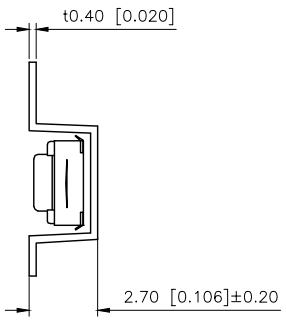

SPECIFICATION

Contact Rating: 50mA,12V DC
Contact Resistance: 100mΩ max
Insulation Resistance: 100MΩ min.500V DC
Dielectric Strength: 250V AC/1minute
Travel: 0.20mm
Operating Temp: −30℃~+85℃
Storage Temp: −30℃~+80℃

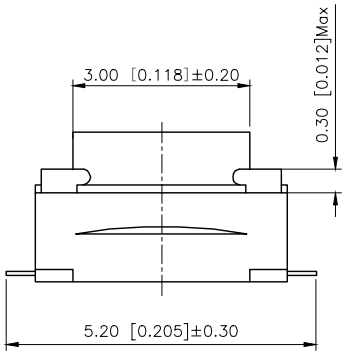

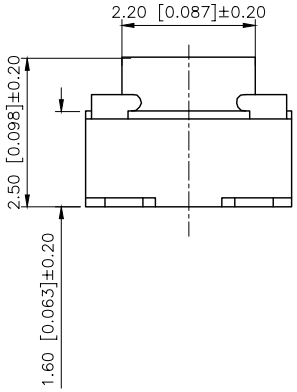

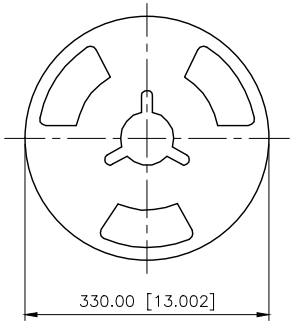

PACKING PEEL TYPE 4000/1REEL(EA)

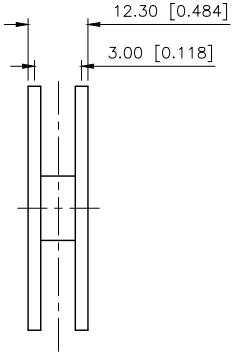

PAPT NO	TS−1145A−C−A
Operating Force	A:100gf B:160gf C:260gf D:350gf
Height	H:2.5
Keystake	A:PA46 B:Silica gel

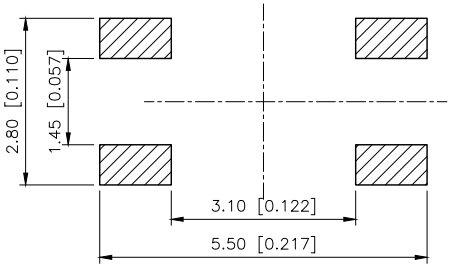

PCB MOUNTING HOLES

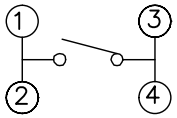

CIRCUIT DIAGRAM

ITEM	PAPT NAMF	QTY	MATERIAL	FINISHING
⑤	Terminal	4	Brass（0.30t）	Plating silvering
④	Contact	1	F.ag/SUS	Natural
③	Base	1	Lcp	
②	Cover	1	Brass	Plating Nickel
①	Keystake	1	PA46	

AuGLAR	±5°
X.	±0.40
X.x	±0.30
X.xx	±0.20
X.xxx	±0.15
UNSPECIFIED TOLERAuCES	

XKB Connection

DESIGN	阿树	VIEW:	MODEL TYPE: TACT SWITCH
CHECKED		UNIT: mm/in	PART NO.: TS−1145A−C−A
APPROVED		SIZE: A4	DWG NO.: TS−1145A−C−A

XKB INDUSTRIAL PRECISION CO.,LIMITED

SCALE	PAGE	REVISION
N/A	1/1	A1

www.helloxkb.com www.helloxkb.cn www.xk−dg.cn