REVISIONS					
REV.	ECN NO.	LOCATION	DESCRIPTION	DATE	DESIGN
A0	N/A		INITIAL RELEASE	2024.07.02	阿 树

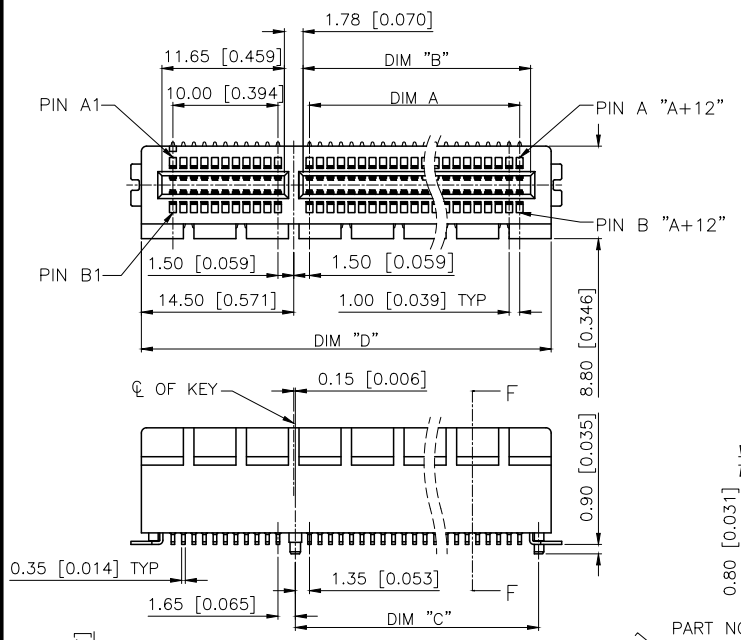

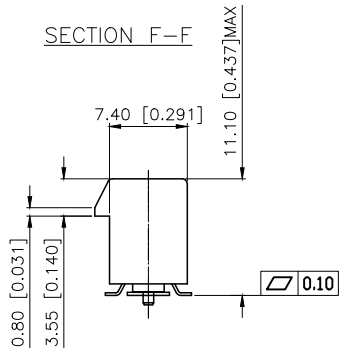

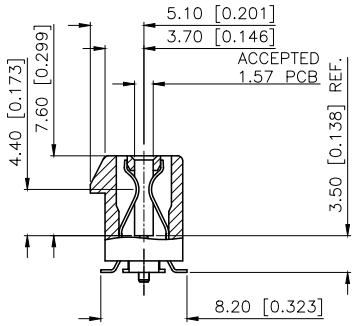

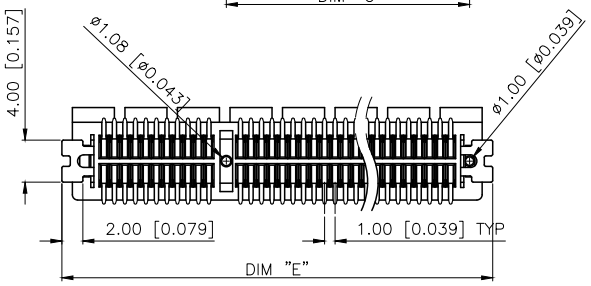

PART NO.:

X3113 W V S-98-9T V30
① ② ③ ④ ⑤ ⑥ ⑦

①Series Nunber
②Terminal: W-Wafer
③Welding Board Angle: V-Straight Angle 180°
④Welding way: S-SMT
⑤No.of Pins: 36~164 Pin
⑥Plastic material: PA9T/PA46 UL94V-0
⑦Contact Plating: V01-Gold Flash
V15-Gold 15u"
V30-Gold 30u"

DIMENSIONS					
POSITION	A±0.20	$B^{+0.20}_{-0.08}$	C±0.20	D±0.25	E±0.30
36	6	7.65	9.15	25.00	27.00
64	20	21.65	23.15	39.00	41.00
98	37	38.65	40.15	56.00	58.00
164	70	71.65	73.15	89.00	91.00

ANGLAR	±5°
X.	±0.40
X.x	±0.30
X.xx	±0.20
X.xxx	±0.15
UNSPECIFIED TOLERANCES	

XKB INDUSTRIAL PRECISION CO.,LIMITED

DESIGN	阿 树	VIEW:	MODEL TYPE: PCI ECPRESS SMT TYPE
CHECKED		UNIT: mm/in	PART NO.: X3113WVS-98-9TV30
APPROVED		SIZE: A4	DWG NO.: X-X3113WVS-98-9TV30
			SCALE N/A / PAGE 1/2 / REVISION A0

www.helloxkb.com www.helloxkb.cn www.xk-dg.cn

REVISIONS					
REV.	ECN NO.	LOCATION	DESCRIPTION	DATE	DESIGN
A0	N/A		INITIAL RELEASE	2024.07.02	阿 树

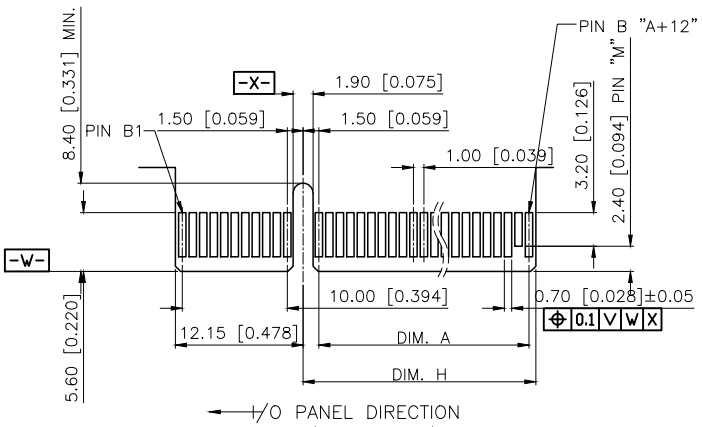

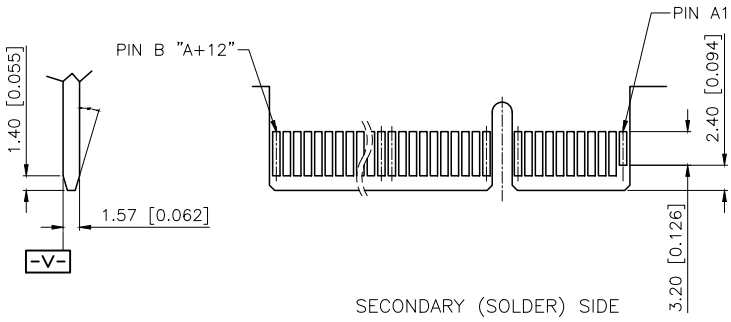

I/O PANEL DIRECTION
PRIMARY (COMPONENT) SIDE

SECONDARY (SOLDER) SIDE

NOTES:
CHAMFER EDGE MUST BE FREE OF CUTTING BURRS

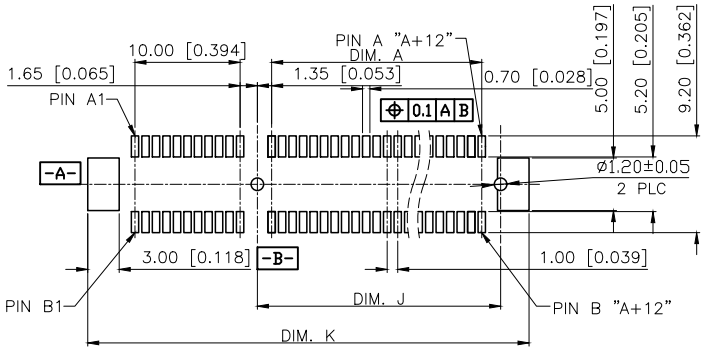

RECOMMENDED PCB LAYOUT
(COMPONENT SIDE)

NOTES:
1. MATERIAL:
1.1 HOUSING: THERMOPLASTIC, HIGH TEMP, UL94V-0, COLOR: SEE PART NO..
1.2 CONTACTS: COPPER ALLOY.
1.3 HOLDDOWN: COPPER ALLOY.
2. FINISH:
2.1 CONTACT:
SELECTIVE GOLD PLATING ON THE CONTACT AREA.
MATTE TIN PLATING ON THE SOLDER TAILS,
NICKEL UNDERPLATING OVERALL.
2.2 HOLDDOWN:
MATTE TIN PLATING WITH NICKEL UNDERPLATE OVERALL.

TOLERANCE: ±0.05

POS.	DIM. A	DIM. H	DIM. J	DIM. K	"M"
36	6	8.15	9.15	28.0	B17
64	20	22.15	23.15	42.0	B31
98	37	39.15	40.15	59.0	B48
164	70	72.15	73.15	92.0	B81

ANGLAR	±5°
X.	±0.40
X.x	±0.30
X.xx	±0.20
X.xxx	±0.15
UNSPECIFIED TOLERANCES	

XKB INDUSTRIAL PRECISION CO.,LIMITED

DESIGN	阿 树	VIEW:	MODEL TYPE: PCI ECPRESS SMT TYPE
CHECKED		UNIT: mm/in	PART NO.: X3113WVS-98-9TV30
APPROVED		SIZE: A4	DWG NO.: X-X3113WVS-98-9TV30
			SCALE N/A / PAGE 2/2 / REVISION A0

www.helloxkb.com www.helloxkb.cn www.xk-dg.cn