REVISIONS					
REV.	ECN NO.	LOCATION	DESCRIPTION	DATE	DESIGN
A0	N/A		INITIAL RELEASE	/	/
A1	N/A		图面升级整理图面	2025.06.17	阿树

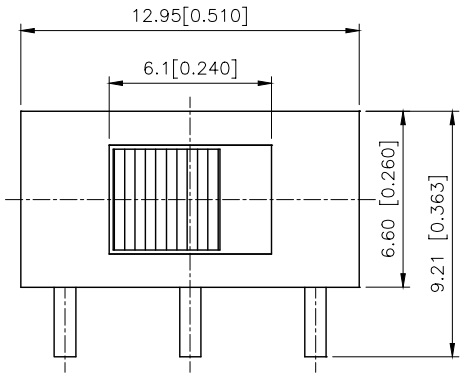

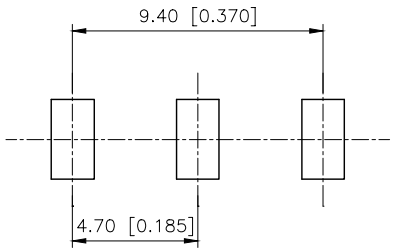

P.C.B LAYOUT

SS-12D06 G 5 R

Knob Type
L
G

H(mm)
2~12

Colour
Blank:Standard Black
R:Red

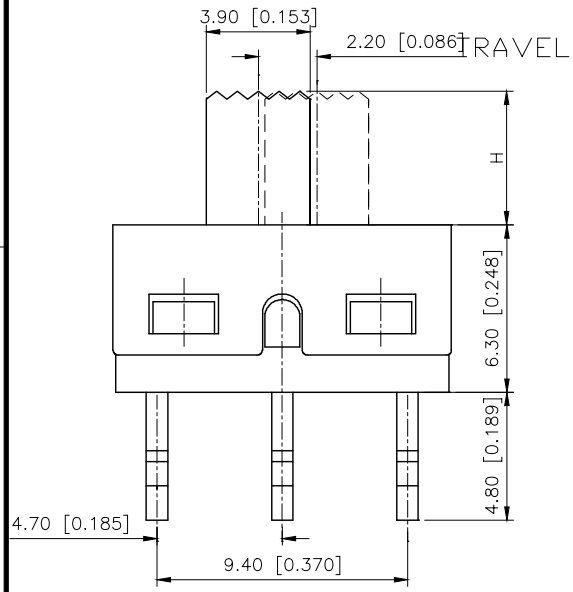

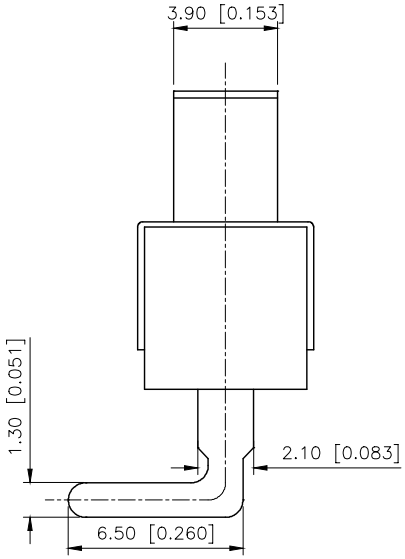

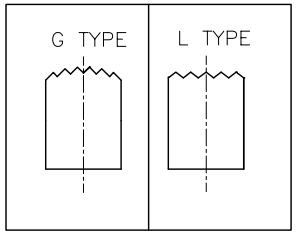

Typical Specifications
1.Rating:AC 125V 3A
2.Insulation Resistance:1,000M min
3.Dielectric strength:1,500V RMS
4.Operating Life: 10,000 cycles

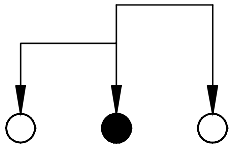

SCHEMATIC

ITEM	PAPT NAME	QTY	MATERIAL	FINISHING
5	Terminal	3	Copper Alloy	silver plated
4	Contact	1	Copper Alloy	silver plated
3	Housing	1	Stainless Steel	
2	Slide Handle	1	Nylon	
1	Case	1	Diallyl Phthalate (DAP)	

AuGLAR	±5°
X.	±0.40
X.x	±0.30
X.xx	±0.20
X.xxx	±0.15
UNSPECIFIED TOLERAuCES	

XKB Connection 星坤

DESIGN	阿树	VIEW:	MODEL TYPE: SLIDE SWITCH
CHECKED		UNIT: mm/in	PART NO.: SS-12D06 G5R
APPROVED		SIZE: A4	DWG NO.: X-SS-12D06 G5R

XKB INDUSTRIAL PRECISION CO.,LIMITED

SCALE	PAGE	REVISION
N/A	1/1	A1