Downloaded from Arrow.com.

SIGN	DATE	DESCRIPTION	APPROVER

THIS IS CAD DRAWING, DO NOT REVISE MANUALLY!!!

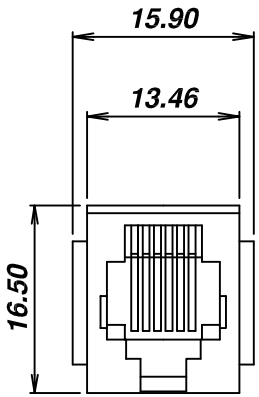

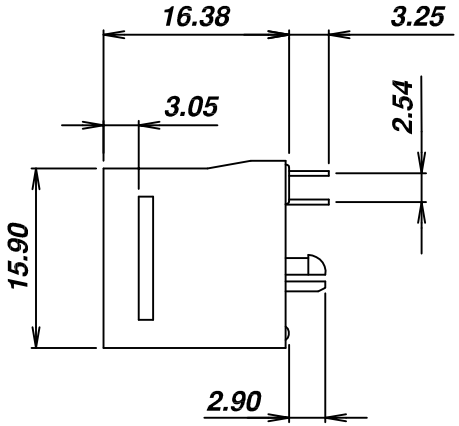

Material:

- Housing: PBT Glass Filled (UL 94V-0)
- Color: Black
- Spring Wire: 0.45mm Diameter Phosphor Bronze
  Gold Plating over Nickel
- Temp. Range: -25°C/+90°C
- Durability: 500 Mating cycles Min.

Electrical:

- Current rating: 1.5A Max.
- Voltage rating: 120V AC
- Insulation Resistance: 500 MΩMin.
- Contact Resistance: 20mΩMax.
- Dielectric Voltage: 1,000 Vrms for 60 sec. min.

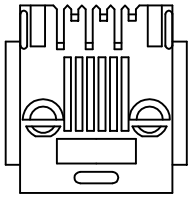

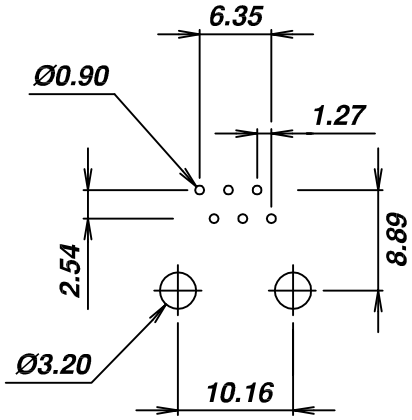

PCB LAYOUT
(Top View)

- Part Number

PJ012-6PXCX-F

No. of contacts	2, 4, or 6
Gold plating	1=6u" 2= 15u" 3=30u" 4=50u"

RoHS Compliant

THESE DRAWINGS AND SPECIFICATIONS ARE THE PROPERTY OF ON-SHORE TECHNOLOGY, INC. AND SHALL NOT BE REPRODUCED, COPIED OR USED IN ANY MANNER WITHOUT THE PRIOR WRITTEN CONSENT OF ON-SHORE TECHNOLOGY, INC.

ON-SHORE TECHNOLOGY, INC.

TITLE	PJ012, 6 pos, top entry, thru hole					
PART NO.	PJ012-6PXCX-F			DWG NO.	PJ012-6PXCX-F.DWG	
APPROVED	CHECKED	DESIGNED	DRAWN	CUST NO.		Tolerance
Billy 2006.02.07	Johnn 2006.02.07	Tony 2006.02.07	Steven 2006.02.07	SHEET: 01/01	UNIT: mm SCALE: NONE REV.: A	X.XX ±0.025 X.XXX ±0.13 X.XXXX ±0.05