NOTES:

1. MATERIAL: NYLON, 94V-2. COLOR: NATURAL (WHITE)

2. FINISH: NONE

3. PRODUCT SPEC: NONE

4. PACKAGING SPECIFICATION: 436030003-PK

5. THIS HOUSING IS FOR USE WITH TERMINAL NO. 41422-5001 TERMINAL WHICH CRIMPS TO 14 TO 18 AWG WIRE WITH .031/(.79) THICK INSULATION

6. THIS PART CONFORMS TO CLASS B REQUIREMENTS OF COSMETIC SPECIFICATION PS-45499-002

7. THIS DRAWING REPLACES DRAWING SD-43603-0003

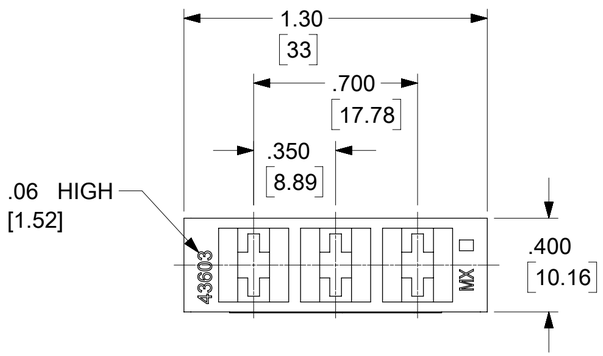

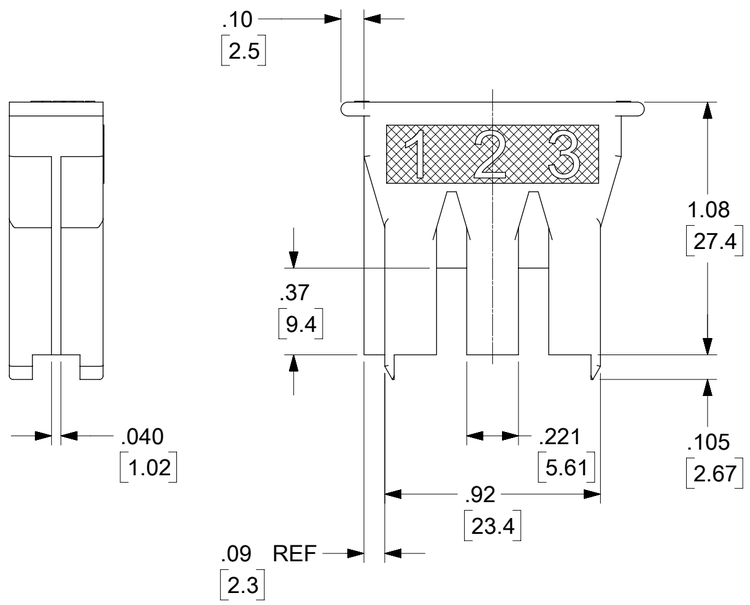

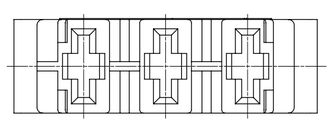

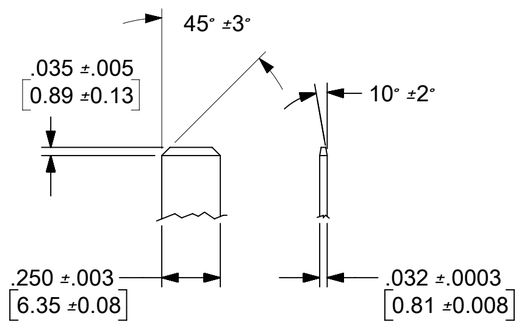

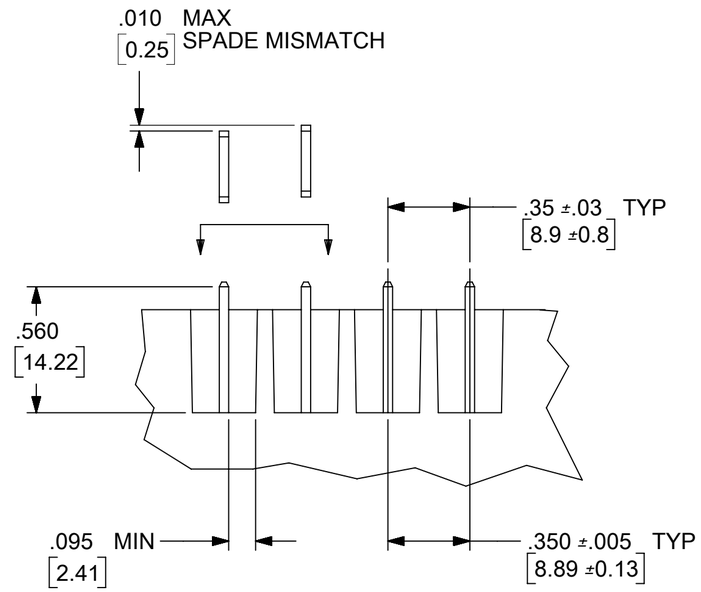

TERMINAL/HOUSING
ASSEMBLY RELATIONSHIP

MODEL: 436030003

RELEASE STATUS	P1	RELEASE DATE	26.05.2017 22:13:30

QUALITY SYMBOLS	
FA	= 0
FC	= 0
FD	= 0
▼	= 0
C	= 0
☒	= 0
■	= 0
C	= 0

THIS DRAWING CONTAINS INFORMATION THAT IS PROPRIETARY TO MOLEX ELECTRONIC TECHNOLOGIES, LLC AND SHOULD NOT BE USED WITHOUT WRITTEN PERMISSION

EC NO:	DRWN:	CHK'D:	APPR:	DATE	REV
111555	JQUILES	JDFOX	FSMITH	2017/01/05 2017/05/25 2017/05/26	A

INITIAL RELEASE

GENERAL TOLERANCES (UNLESS SPECIFIED)	MM	INCH
4 PLACES	±	±
3 PLACES	±	± 0.01
2 PLACES	± 0.25	± 0.014
1 PLACES	± 0.35	±
0 PLACES	±	±
ANGULAR TOL ± 5.0		

DRAFT WHERE APPLICABLE MUST REMAIN WITHIN DIMENSIONS

DIMENSION UNITS	SCALE
IN/MM	2:1

		DATE
DRWN BY	KSAMIEC	08/04/1995
CHK'D BY	BRUSHTON	08/04/1995
APPR BY	BLENZ	08/04/1995

DRAWING SIZE: C

THIRD ANGLE PROJECTION

molex®

HOUSING, RECEPTACLE 3 CIRCUIT

PRODUCT CUSTOMER DRAWING

SERIES	MATERIAL NUMBER	CUSTOMER
43603	436030003	GENERAL MARKET

DOCUMENT NUMBER	DOC TYPE	DOC PART	SHEET NUMBER
436030003-SD	PSD	000	1 OF 1

FORMAT: Eng-lega-master-tb-prod-C
REVISION: C
DATE: 2016/02/04