THIS DRAWING IS UNPUBLISHED. RELEASED FOR PUBLICATION – ,– .
© COPYRIGHT – By – ALL RIGHTS RESERVED.

REVISIONS

P	LTR	DESCRIPTION	DATE	DWN	APVD
	H1	REVISED PER ECO–11–004917	11MAR11	RK	HMR
	H2	REVISED PER ECO–17–014338	30MAR2018	RS	DR

AMP WIRE RANGE	Listed FILE E13288	LR7189 Certified
22–16 AWG SOLID OR STRANDED	22–16 AWG SOLID OR STRANDED	22–16 AWG SOLID OR STRANDED

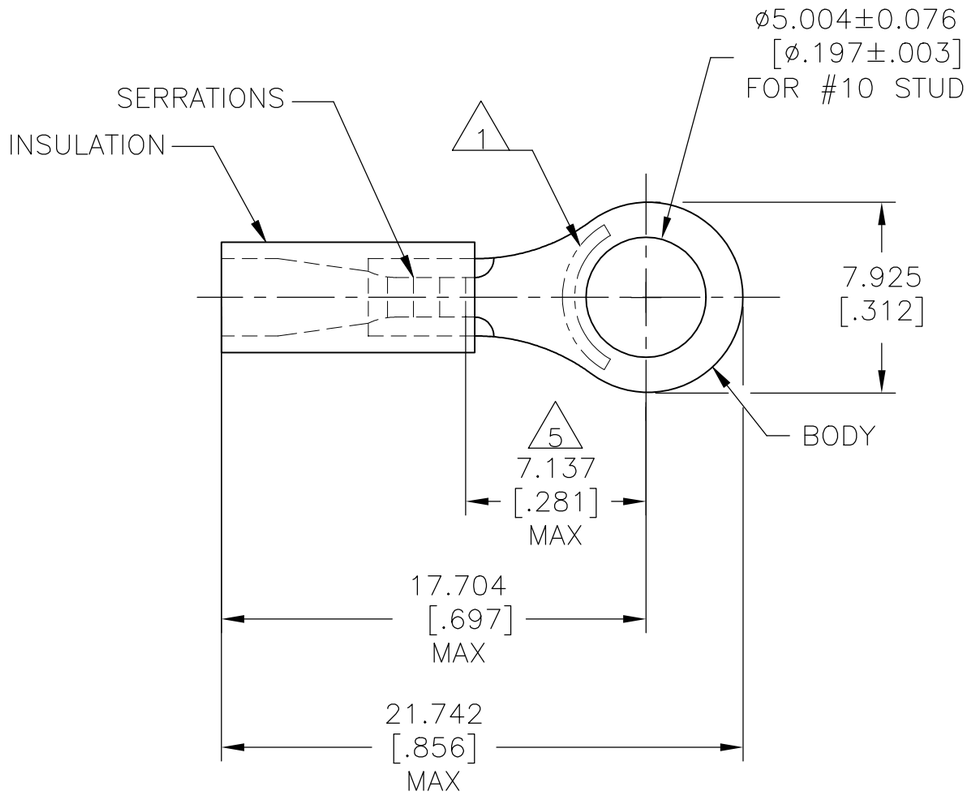

1. STAMP AMP 22–18* 1–2 APPROX AS SHOWN 22–16 TERMINALS ARE STAMPED 22–18 IN ACCORDANCE WITH MILITARY SPEC SAE AS7928 COMMERCIAL WIRE RANGE IS 22–16
2. WIRE INSULATION DIA: 2.032–3.175[.080–.125]
3. BODY MATERIAL THK: 0.787±0.051[.031±.002]
4. MATERIAL: BODY – CU PER ASTM B152
   INSULATION – PVC
5. APPLIES FROM CENTER OF STUD HOLE TO EDGE OF METAL WIRE BARREL

QTY	PACKAGE TYPE	PART NO.
5000	ON TAPE, REEL	2–32952–1
1000	LOOSE PIECE	32952

AMP INCORPORATED
CUSTOMER SERVICE SYSTEMS

FOR ADDITIONAL PRODUCT INFORMATION OR COPIES OF DRAWINGS AND TECHNICAL DOCUMENTS	PRODUCT INFORMATION CENTER 1–800–522–6752	
FOR APPLICATION TOOLING INFORMATION	TOOLING ASSISTANCE CENTER 1–800–722–1111	
FOR ORDER ENTRY	1–800–526–5142	THIS DRAWING IS A CONTROLLED DOCUMENT FOR AMP INCORPORATED. IT IS SUBJECT TO CHANGE AND THE CONTROLLING ENGINEERING ORGANIZATION SHOULD BE CONTACTED FOR THE LATEST REVISION.

MAX RECOMMENDED OPERATING TEMPERATURE: 105°C [221°F]

VOLTAGE RATING: 600V MAX (1000V FIXTURE OR SIGN)

CIRCULAR MIL AREA: 0.26–1.65mm² [509–3260] SOLID OR STRANDED

THIS DRAWING IS A CONTROLLED DOCUMENT.

DIMENSIONS: mm [INCHES]

TOLERANCES UNLESS OTHERWISE SPECIFIED:

0 PLC	± –
1 PLC	± –
2 PLC	± –
3 PLC	± 0.127[.005]
4 PLC	± –
ANGLES	± –

MATERIAL 4

FINISH: BODY:TIN PER ASTM B545; INSULATION: COLOR–RED

DWN	DK SCHRUM	08/06/92
CHK	RE HERSEY	11/10/92
APVD	M BARNABA	11/10/92
PRODUCT SPEC	UL 486A–B	
APPLICATION SPEC	114–2161	
WEIGHT		

TE Connectivity Ltd.

NAME: TERMINAL, RING TONGUE, PLASTI–GRIP, WIRE SIZE, 22–16 AWG

SIZE	CAGE CODE	DRAWING NO	RESTRICTED TO
A3	00779	C–32952	—

CUSTOMER DRAWING | SCALE 4:1 | SHEET 1 OF 1 | REV H2

1470–19 (1/15)