REVISIONS					
REV.	ECN NO.	LOCATION	DESCRIPTION	DATE	DESIGN
A1	N/A		图框升级整理图面	2024.07.31	阿 树

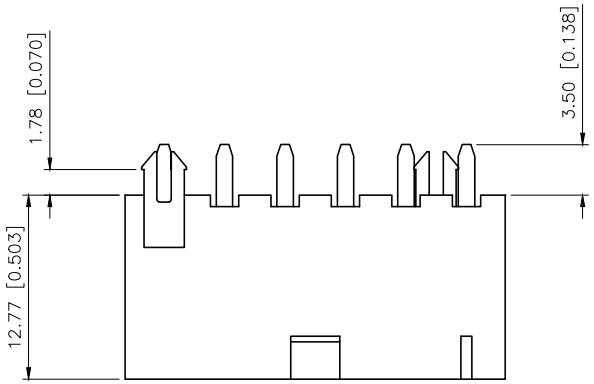

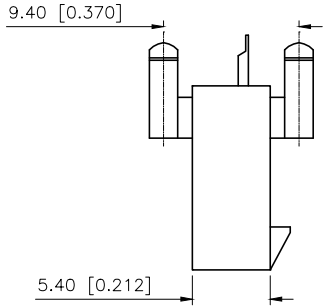

■SPECIFICATIONS
- •Voltage rating:600V AC/DC
- •Current rating:9A AC/DC
- •Withstanding Voltage:1500V AC/minute
- •Temperature range:−45°C+125°C
- •Insulation resistance:≥1000MΩ
- •Contact resistance:≤10mΩ

PART NO.:

X9357 W V−03−FS N2 SN
① ② ③ ④ ⑤ ⑥ ⑦ ⑧

① Series No
② Category:W−Wager
③ Welding Board Angle:V−Straight 180°
④ Row No.Pin No:XX−02~06 P
⑤ Plug the Pin&Special No:FS−The hollow needle with positioning column
⑥ Material:N2−PA66 94V−2
⑦ Plating:SN−Bright tin plating
⑧ Color:Blank−natural color

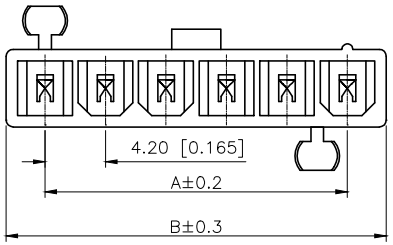

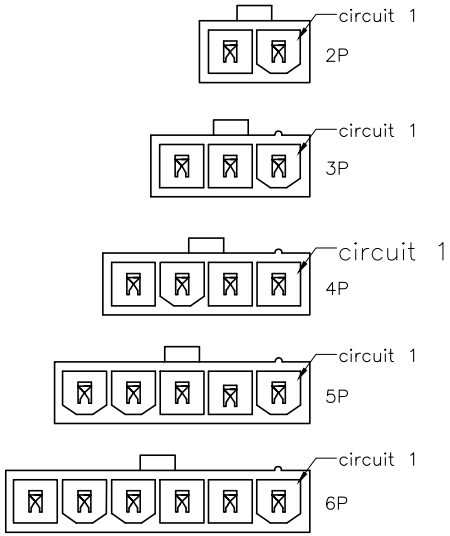

Poles	Dimensions(mm)	
	A	B
02	4.20	9.60
03	8.40	13.80
04	12.60	18.00
05	16.80	22.20
06	21.00	26.40

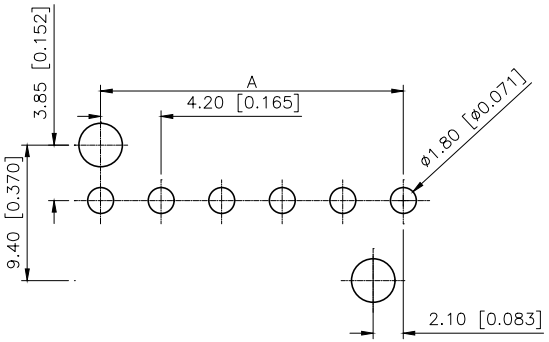

Recommendea P.C.B Layout
General Tolerance±0.05

X9357WV−03FS−N2SN	Nylon 66 UL 94V−2	Brass	Tin−Plated	X9357H
PART NO	Material	Material(Pin)	Finish(Pin)	Suitable XKB Housing

ANGLAR	±5°
X.	±0.40
X.x	±0.30
X.xx	±0.20
X.xxx	±0.15
UNSPECIFIED TOLERANCES	

XKB INDUSTRIAL PRECISION CO.,LIMITED

DESIGN	阿 树	VIEW:	MODEL TYPE: 4.20 mm Crimp Style Connectors
CHECKED		UNIT: mm/in	PART NO.: X9357WV−03FS−N2SN
APPROVED		SIZE: A4	DWG NO.: X−X9357WV−03FS−N2SN

SCALE	PAGE	REVISION
N/A	1/1	A1