REVISIONS					
REV.	ECN NO.	LOCATION	DESCRIPTION	DATE	DESIGN
A1	N/A		图面升级整理图面	2024.07.12	阿树
A2	N/A		新增其他pin数样式说明	2025.03.05	阿树

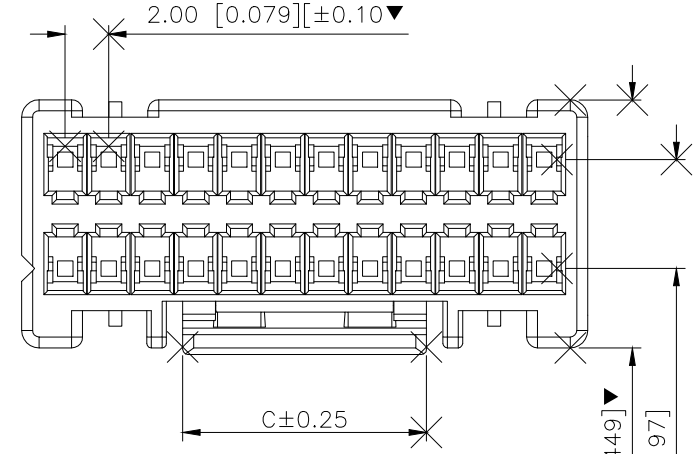

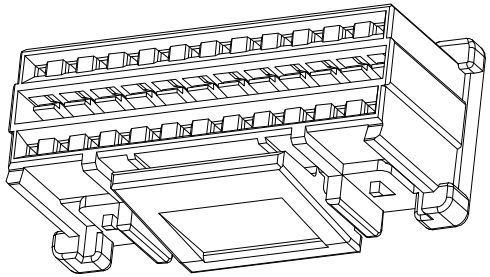

■SPECIFICATIONS
- •Voltage rating:250V AC,DC
- •Current rating:3A,AC,DC
- •Withstanding Voltage:800V AC/minute
- •Insulation resistance:1000MΩ min
- •Temperature range:−45°C+95°C
- •Contact resistance:15mΩ max

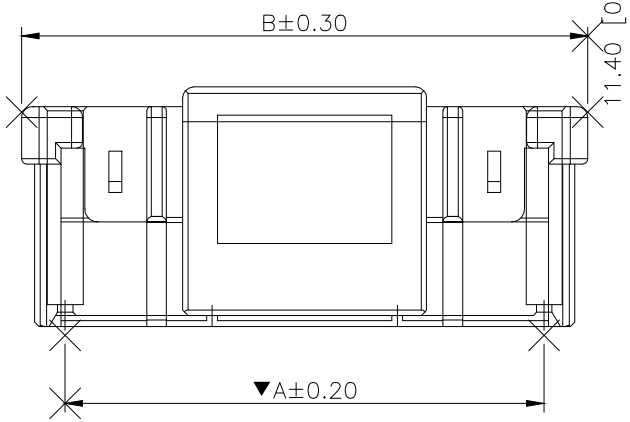

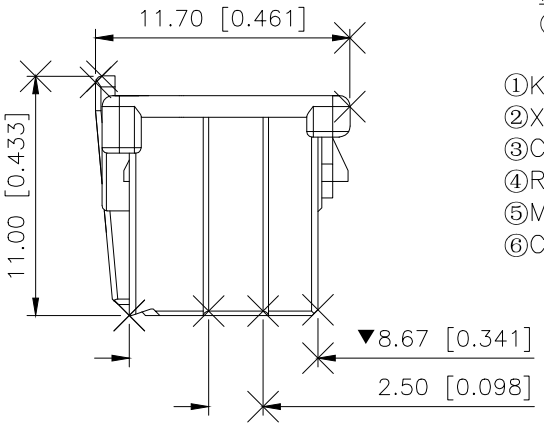

PART NO.:

K 202820 H−2x08−N0 W
① ② ③ ④ ⑤ ⑥

①K:XKBTEK−Car Connector
②XKB Series No
③Category:H−HOUSING
④Row No−Pin：2xXX−2x04P~2X21P
⑤Material:NO−PA66 UL 94V−0
⑥Color：W−White；B−Black；GY−Grey

Poles	Dimension mm A	B	C
2x04	6.00	10.00	4.80
2x05	8.00	12.00	4.80
2x06	10.00	14.00	4.80
2x07	12.00	16.00	4.80
2x08	14.00	18.00	4.80
2x09	16.00	20.00	4.80
2x10	18.00	22.00	11.20
2x11	20.00	24.00	11.20
2x12	22.00	26.00	11.20
2x13	24.00	28.00	11.20
2x14	26.00	30.00	11.20
2x15	28.00	32.00	11.20
2x16	30.00	34.00	15.20
2x17	32.00	36.00	15.20
2x18	34.00	38.00	15.20
2x19	36.00	40.00	15.20
2x20	38.00	42.00	15.20
2x21	40.00	44.00	15.20

PART NO	Material	Suitable XKB Terminal	Suitable XKB Wafer
K202820H−2x08−N0W	PA66 UL 94V−0	X202820T	X202820W

AuGLAR	±5°
X.	±0.40
X.x	±0.30
X.xx	±0.20
X.xxx	±0.15
UNSPECIFIED TOLERAuCES	

XKB Connection 星创

DESIGN	阿树	VIEW:	MODEL TYPE: 2.0mm Automobile Connector
CHECKED		UNIT: mm/in	PART NO.: K202820H−2x08−N0W
APPROVED		SIZE: A4	DWG NO.: X−K202820H−2x08−N0W

XKB INDUSTRIAL PRECISION CO.,LIMITED

SCALE	PAGE	REVISION
N/A	1/3	A2

REVISIONS					
REV.	ECN NO.	LOCATION	DESCRIPTION	DATE	DESIGN
A1	N/A		图面升级整理图面	2024.07.12	阿树
A2	N/A		新增其他pin数样式说明	2025.03.05	阿树

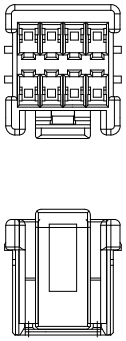

2X4P

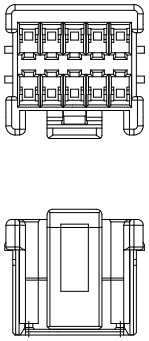

2X5P

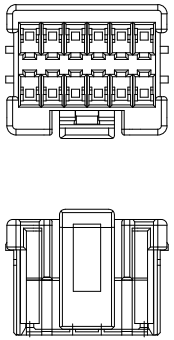

2X6P

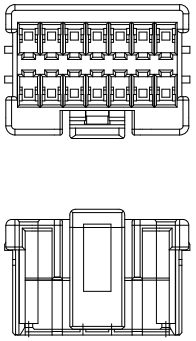

2X7P

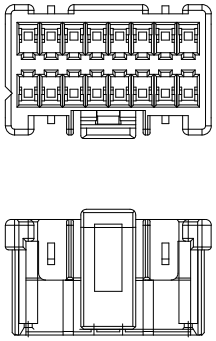

2X8P

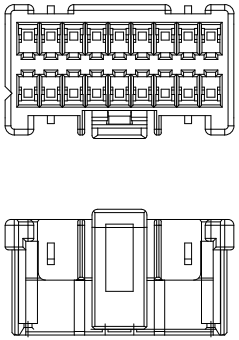

2X9P

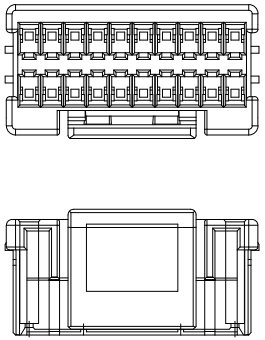

2X10P

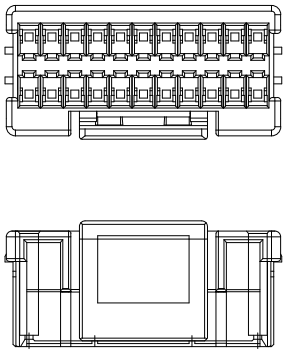

2X11P

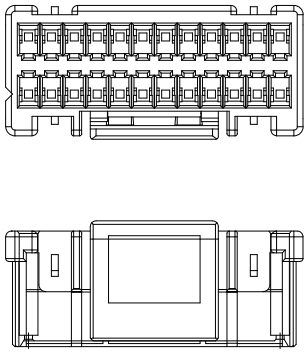

2X12P

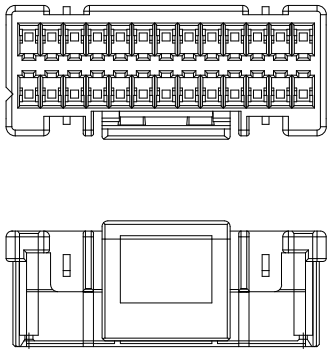

2X13P

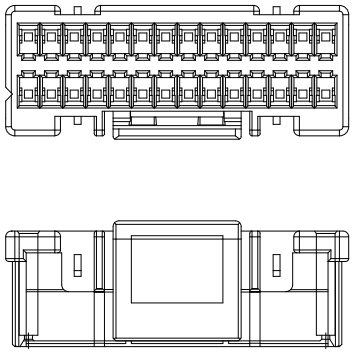

2X14P

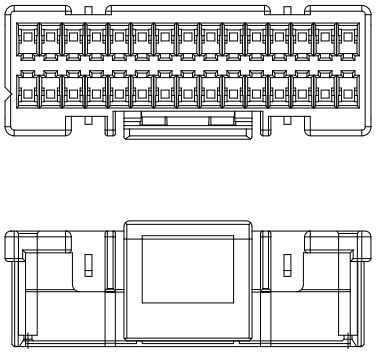

2X15P

AuGLAR	±5°
X.	±0.40
X.x	±0.30
X.xx	±0.20
X.xxx	±0.15
UNSPECIFIED TOLERAuCES	

XKB Connection

DESIGN	阿树	VIEW:	MODEL TYPE: 2.0mm Automobile Connector
CHECKED		UNIT: mm/in	PART NO.: K202820H-2x08-N0W
APPROVED		SIZE: A4	DWG NO.: X-K202820H-2x08-N0W

XKB INDUSTRIAL PRECISION CO.,LIMITED

SCALE	PAGE	REVISION
N/A	2/3	A2

REVISIONS					
REV.	ECN NO.	LOCATION	DESCRIPTION	DATE	DESIGN
A1	N/A		图面升级整理图面	2024.07.12	阿树
A2	N/A		新增其他pin数样式说明	2025.03.05	阿树

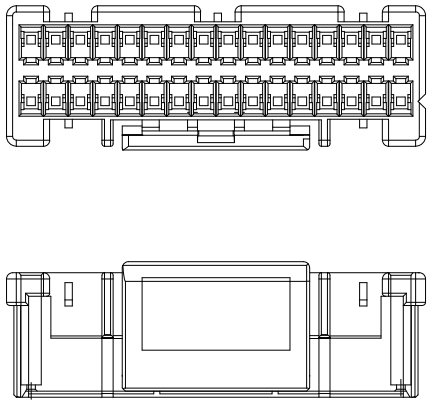

2X16P

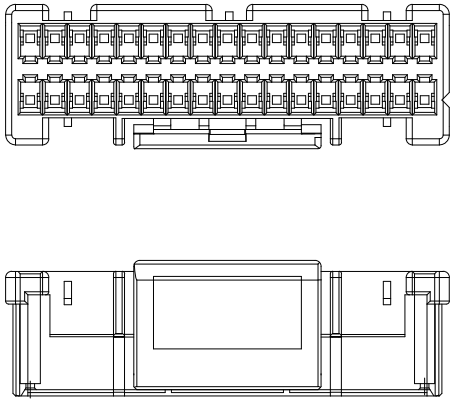

2X17P

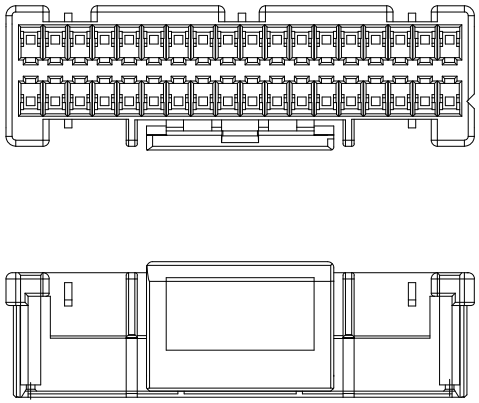

2X18P

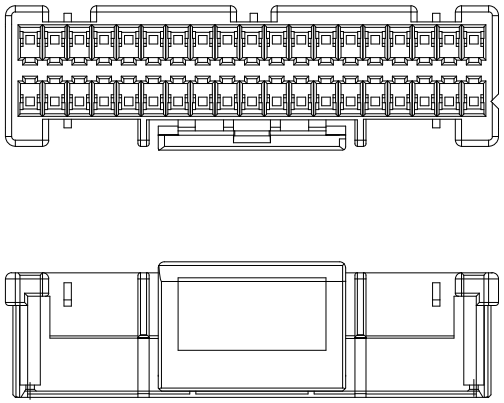

2X19P

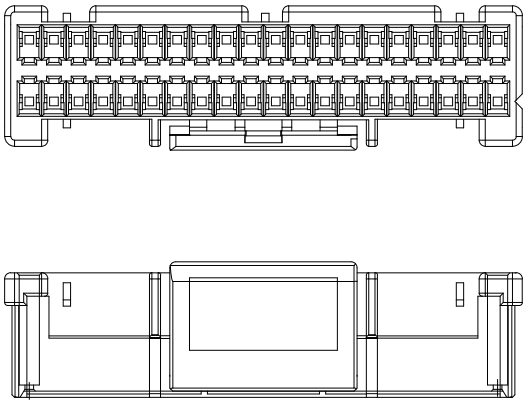

2X20P

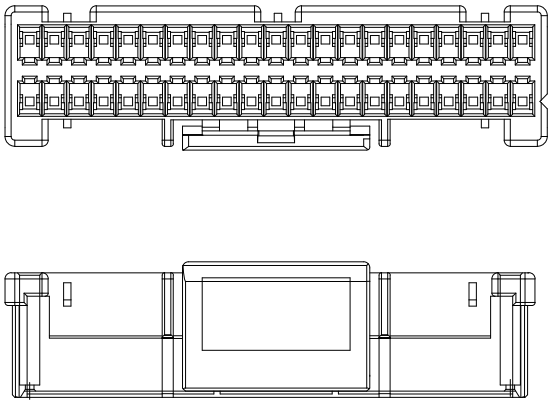

2X21P

AuGLAR	±5°
X.	±0.40
X.x	±0.30
X.xx	±0.20
X.xxx	±0.15
UNSPECIFIED TOLERAuCES	

XKB Connection 星创

DESIGN	阿树	VIEW:	MODEL TYPE: 2.0mm Automobile Connector
CHECKED		UNIT: mm/in	PART NO.: K202820H-2x08-N0W
APPROVED		SIZE: A4	DWG NO.: X-K202820H-2x08-N0W

XKB INDUSTRIAL PRECISION CO.,LIMITED

SCALE	PAGE	REVISION
N/A	3/3	A2