REVISIONS					
REV.	ECN NO.	LOCATION	DESCRIPTION	DATE	DESIGN
A0	N/A		INITIAL RELEASE	/	/
A1	N/A			2025.05.22	

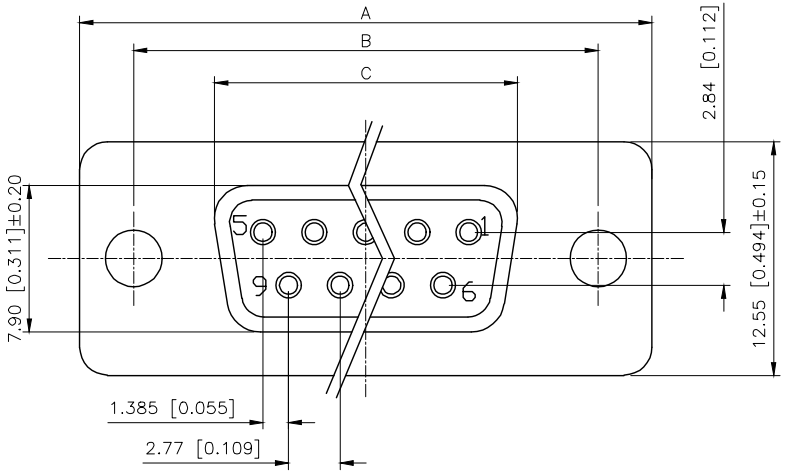

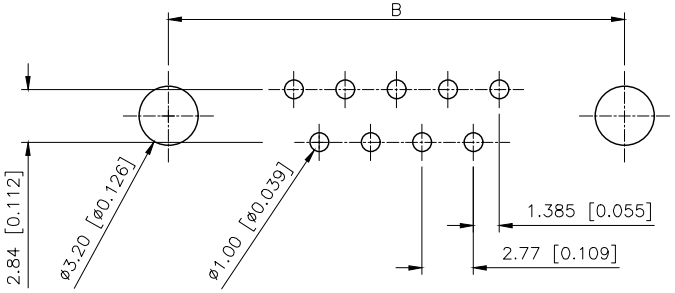

P.C.B LAYOUT

PART NO.:

X02 15 F C 2 W 5

Series NO.
Row No.Pin No.XX−09;15;25;37
Welding Board Angle :F−Female
T Tradutional C Car−pin
Planting Categotry: 1:1U' 2:2U' 3:3U' 4:5U'
5:15U' 6:30U' 7:AuSn
Color:B−BLACK W−White BL−Blue
1:TYPE−1; 2:TYPE−2; 5:TYPE−5; 7:TYPE−7

Specifications:

1.Voltage rating:250VAC/DC
250V AC/DC
2.Current rating:3A(T) / 5A(C) AC/DC
: 3A(T) / 5A(C) AC/DC
3.Withstanding voltage:500V AC/minute
≥500V AC/
4.Temperature range: −55 −+105
−55 −+105
5.Insulation resistance:1000MΩMIN
≥1000MΩ
6.Contact resistance:30mΩMax
≥30mΩ
Materiai

7.Rubber core:PBT UL94V−0
PBT UL94V−0
8.The iron shell:SPCC Nivkel Plating/Tin Plating/Gold Plating
SPCC, / /
9.Terminal C2680
C2680
R

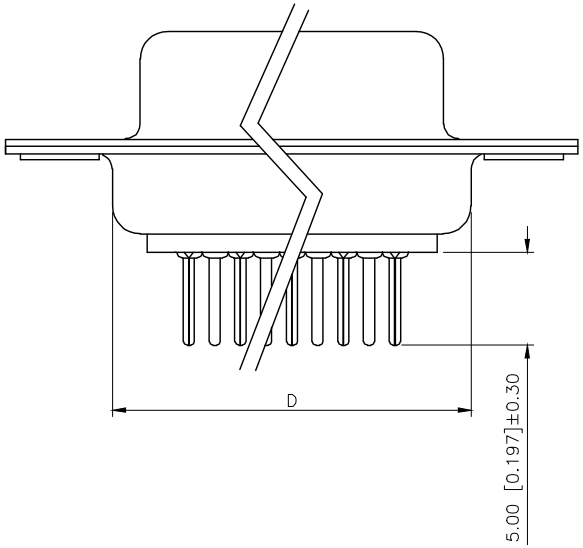

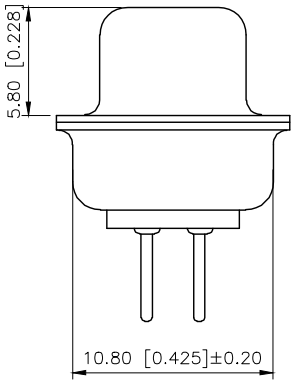

NUMBER OF POSITIONS	DIMENSION			
	A±0.25	B±0.13	C±0.38	D±0.25
9	30.80	24.99	16.35	19.28
15	39.20	33.32	24.75	27.51
25	53.05	47.04	38.35	41.28
37	69.40	63.50	54.75	57.71

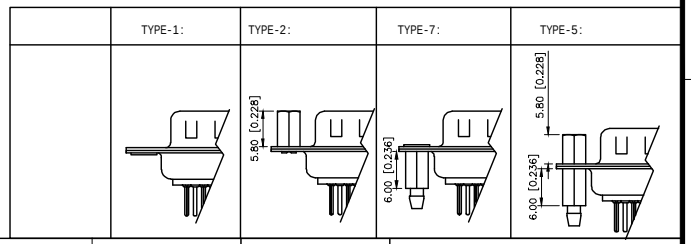

AuGLAR	±5°
X.	±0.40
X.x	±0.30
X.xx	±0.20
X.xxx	±0.15
UNSPECIFIED TOLERAuCES	

XKB Connection 星创

DESIGN		VIEW:	MODEL TYPE: D−SUB
CHECKED		UNIT: mm/in	PART NO.: X0215FC2W5
APPROVED		SIZE: A4	DWG NO.:

XKB INDUSTRIAL PRECISION CO.,LIMITED

SCALE	PAGE	REVISION
N/A	1/1	A1