DATE	REV	ECN	APP'D. BY
10-25-16	C4	10800	TRM
8-25-17	C5	11072	TRM

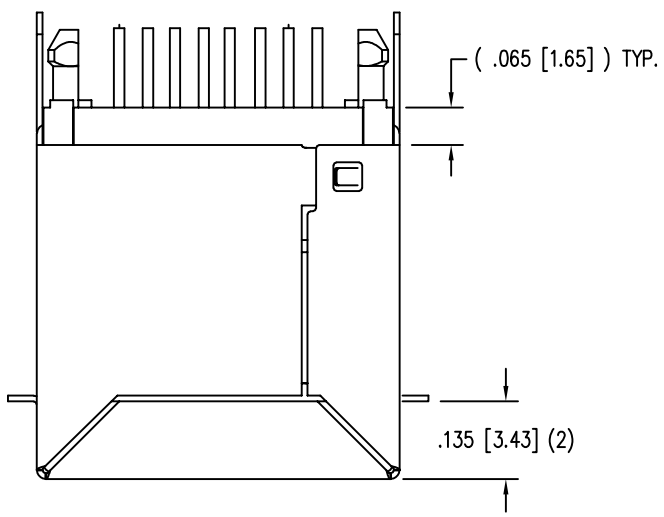

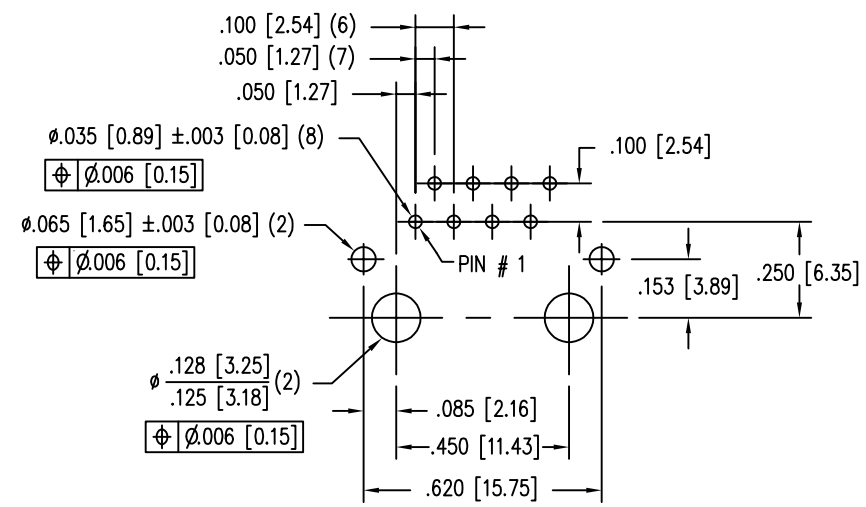

P.C.B. RECOMMENDED HOLE LAYOUT
SEEN FROM COMPONENT SIDE

ALL CENTERLINE DIMENSIONS ARE BASIC.

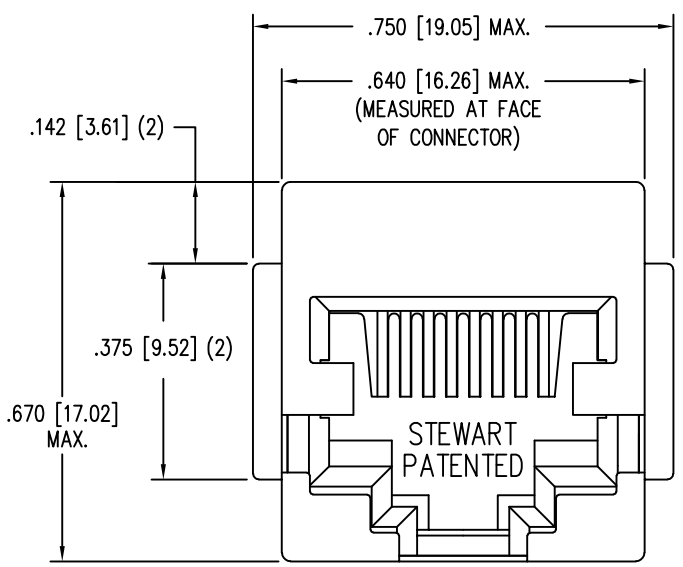

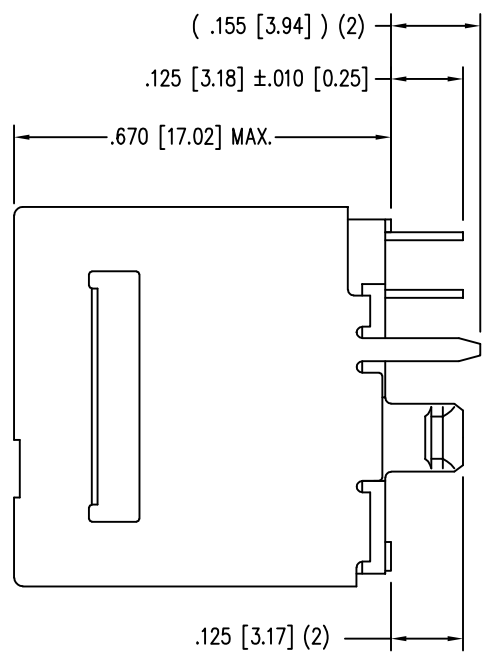

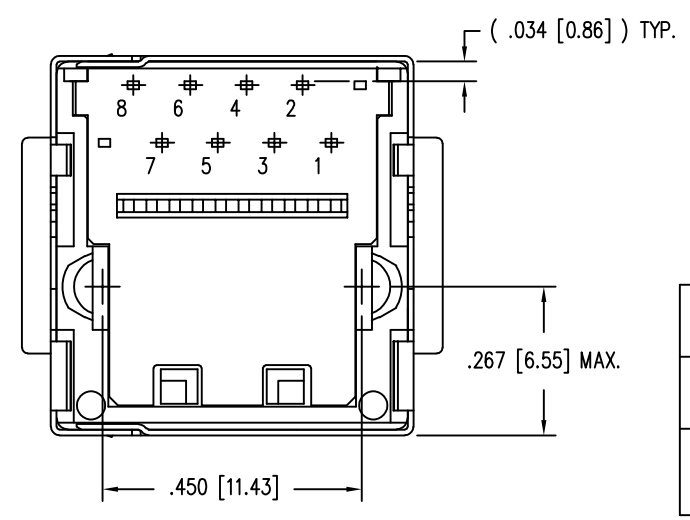

NOTES:

1. CONNECTOR MATERIALS:
   HOUSING: THERMOPLASTIC UL94 V-0
   CONTACTS/SHIELD: COPPER ALLOY
   SHIELD PLATING: NICKEL OR TIN
   CONTACT PLATING: SELECTIVE GOLD IN CONTACT AREA
   SEE CHART FOR PART NUMBER
2. FOR PRODUCT SPECIFICATIONS SEE PR026-01.
3. DIMENSIONS AND TOLERANCES COMPLY WITH TIA-1096 STANDARD.

CONTACT PLATING IN MATING AREA	PART NUMBER
50 MICRO-INCHES [1.27um]	SS-650810S-A-FLS-50
30 MICRO-INCHES [0.76um]	SS-650810S-A-FLS

THIRD ANGLE PROJECTION

DO NOT SCALE DRAWING

DRAWING IS SUBJECT TO CHANGE WITHOUT NOTICE

DIMENSIONS: INCHES [METRIC]

UNLESS OTHERWISE SPECIFIED TOLERANCES ARE ±.005 [0.13] ANGLES ARE ± 1°

SHEET NO. 1 OF 1

RoHS

stewart CONNECTOR a bel group

11118 Susquehanna Trail South
Glen Rock, PA 17327-9199
(717) 235-7512
http://www.stewartconnector.com

TITLE: EIGHT POSITION, EIGHT CONTACT, VERTICAL MOUNT SHIELDED JACK, FLANGED

THIS DRAWING AND THE SUBJECT MATTER SHOWN THEREON ARE CONFIDENTIAL AND THE PROPRIETARY PROPERTY OF STEWART CONNECTOR AND SHALL NOT BE REPRODUCED, COPIED, OR USED IN ANY MANNER WITHOUT PRIOR WRITTEN CONSENT OF STEWART CONNECTOR. ONE OR MORE U.S. PATENTS MAY APPLY TO THIS PRODUCT. FOR DETAILS, PLEASE VISIT: HTTP://BELFUSE.COM/STEWART/STEWART_PATENTS/

DRN BY:	DAB	DATE	4/7/03
APPD BY:	RGC	DATE	5-2-03
DWG NO.	CT650035	REV.	C5

AutoCAD

Downloaded from Arrow.com.