REVISIONS					
REV.	ECN NO.	LOCATION	DESCRIPTION	DATE	DESIGN
A0	N/A		INITIAL RELEASE	/	/
A1	N/A		图面升级整理图面	2025.05.08	阿树

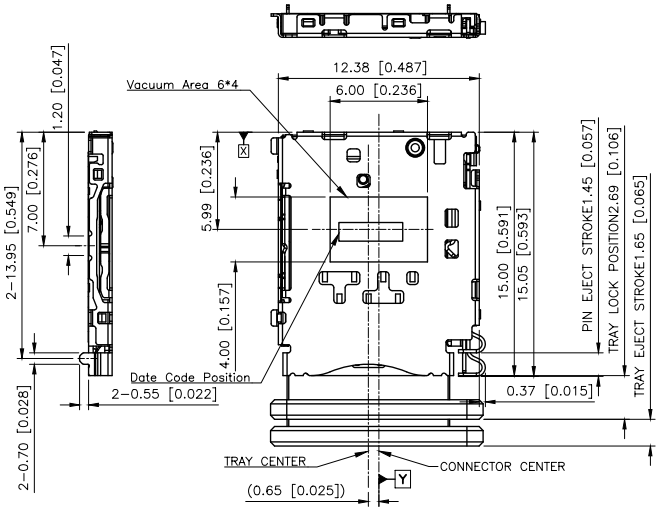

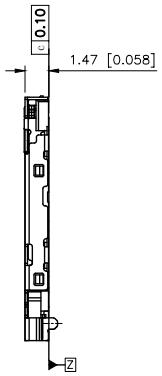

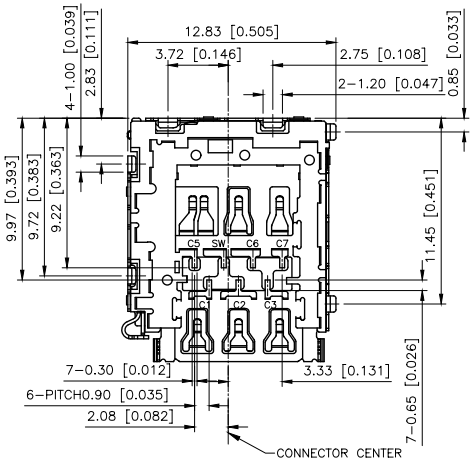

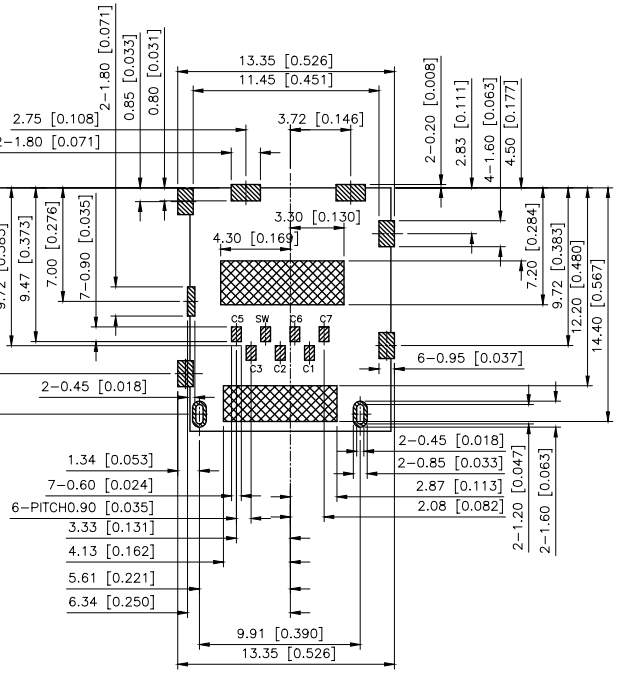

PAD AREA
KEEP OUT AREA
NO COPPER AREA
(NO Trace&Via&GND)
GND PATTERN ONLY

RECOMMEND P.C.B LAYOUT
(General tolerance ±0.05)

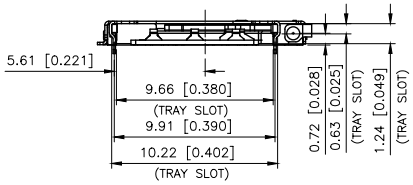

COMPOSITION OF DETECTION
CARD DETECT(SW)
C5 SW
CARD DETECTION/SWITCH
CARD INSTALLATION:ON
NON CARD:OFF

SIM Card Pin Assignments

NANO SIM CARD	
C1	Vcc
C2	RST
C3	CLK
C5	GND
SW	CD/SW
C6	Vpp
C7	DATA

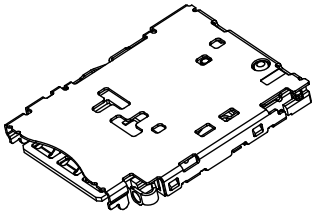

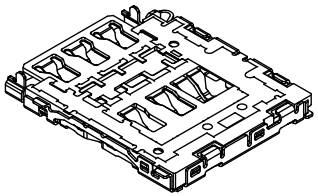

NOTE:
1.材料 Material:
1-1 胶壳 Housing: High Temperature Thermoplastic,LCP)Color Black UL 94V-0
1-2 触点 Contact: Phosphor Bronze(C5210)
1-3 盖子Cover: Stainless steel
2.电镀 Plating:
2-1 接触端子 Contact terminal:
接触电阻 Contact area: Gold 1u" Min.
焊料区 Solder area: Gold 0.8u" Min
底镀 Underplating: Ni overall 50u" Min
2-2 盖子 Cover:
底镀 Underplating: Ni overall 30U" Min.
焊料区 Solder area: Gold 0.8u" Min .
3.规格 Specification:
3-1.额定电流 Current Rating :0.5A max.
3-2.接触电阻 Contact Resistance: 50 mOhms max
3-3.绝缘电阻 Insulation Resistance:1000 MOhms min./500VDC
3-4.介电耐受电压 Dielectric Withstanding Voltgge:50 V AC/1minute
3-5.工作温度 Operating Temperature:-25°C to+85°C
3-6.寿命 Mating Cycles:5000 Insertions
4.Product Compliant to RoHs Directive 2002/95/EC and ELV 2000/53/EC

AuGLAR	±5°
X.	±0.40
X.x	±0.30
X.xx	±0.20
X.xxx	±0.15
UNSPECIFIED TOLERAuCES	

XKB Connection 星创

DESIGN	阿树	VIEW:	MODEL TYPE: SIM CARD CONN
CHECKED		UNIT: mm/in	PART NO.: XKNANO-1131-04
APPROVED		SIZE: A4	DWG NO.: X-XKNANO-1131-04

XKB INDUSTRIAL PRECISION CO.,LIMITED

SCALE	PAGE	REVISION
N/A	1/1	A1

www.helloxkb.com www.helloxkb.cn www.xk-dg.cn