	REVISIONS				
REV.	ECN NO.	LOCATION	DESCRIPTION	DATE	DESIGN
A0	N/A		INITIAL RELEASE	/	/
A1	N/A		图面升级整理图面	2025.06.25	阿树

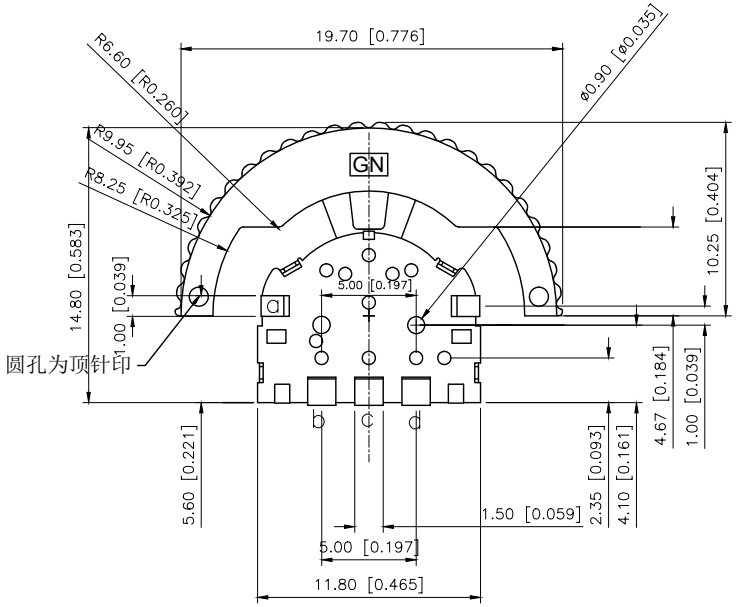

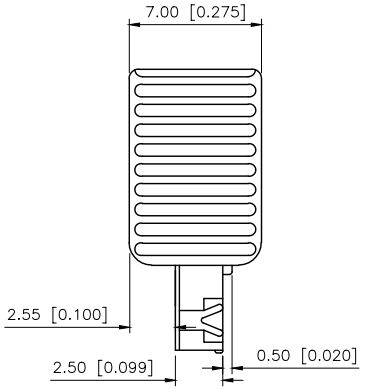

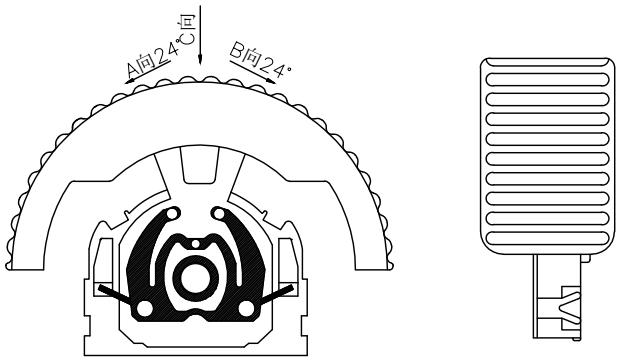

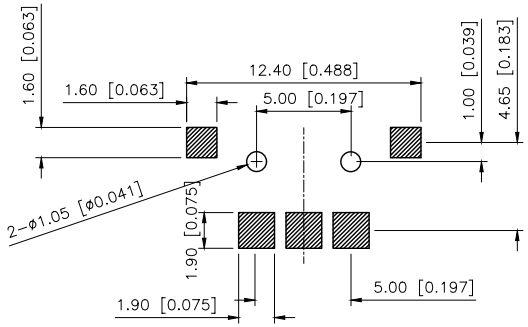

PCB LAYOUT

NOTE:
1.Rating: DC 5V 10mA
2.Contact Resistance:100 mΩ MAX
3.Insulation Resistance:100 MΩ MIN
4.Soldering Temper: 260±5°/5s
5.Mechanical Life: 100,000 cycles
6.Ever Portion 80±50gf
7.Push Portion 205±80gf
8.Travel:−24° 0° +24°

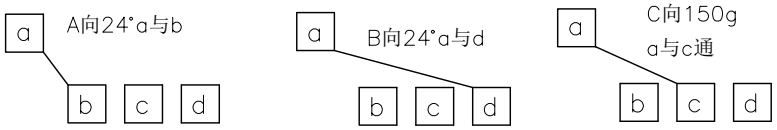

Circuit Diagram

ITEM	PAPT NAMF	QTY	MATERIAL	FINISHING
⑤	Terminal	5	Phosphor Bronze	Plating silver
④	Base	1	Lcp	
③	Spring	1	Sus	Natural
②	Cover	1	Sus	Natural
①	Keystake	1	Ppa	

AuGLAR	±5°
X.	±0.40
X.x	±0.30
X.xx	±0.20
X.xxx	±0.15
UNSPECIFIED TOLERAuCES	

XKB Connection 星创

DESIGN	阿树	VIEW:	MODEL TYPE: MULTI−FUNCTIONAL SWITCH
CHECKED		UNIT: mm/in	PART NO.: TM−2011
APPROVED		SIZE: A4	DWG NO.: XK-TM-2011

XKB INDUSTRIAL PRECISION CO.,LIMITED

SCALE	PAGE	REVISION
N/A	1/1	A1

www.helloxkb.com www.helloxkb.cn www.xk−dg.cn