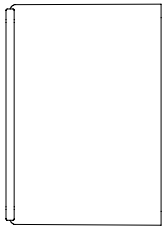

SIDE VIEW OF BOX

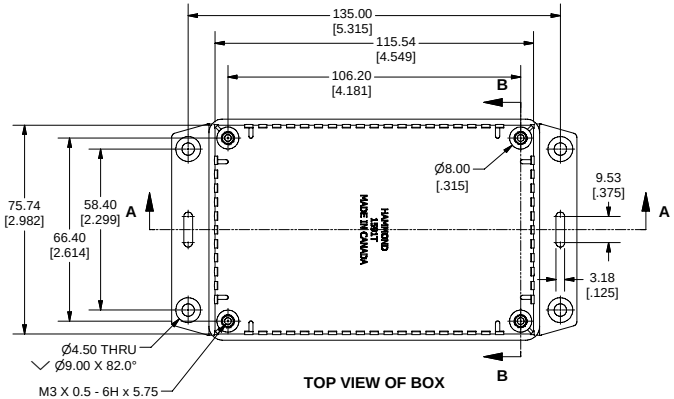

TOP VIEW OF BOX

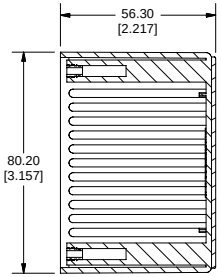

SECTION B-B

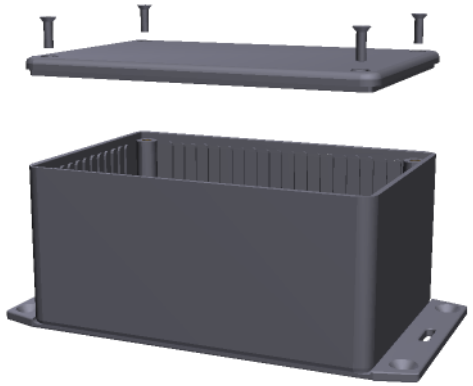

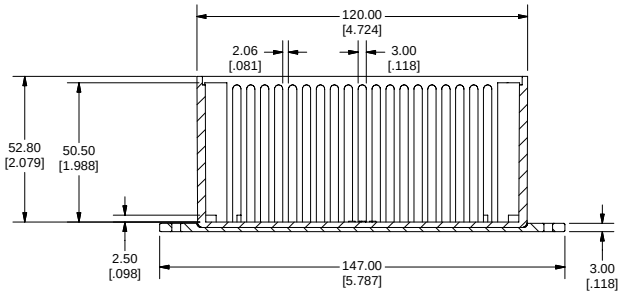

SECTION A-A

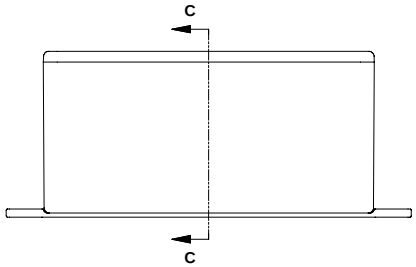

SIDE VIEW OF ASSEMBLY

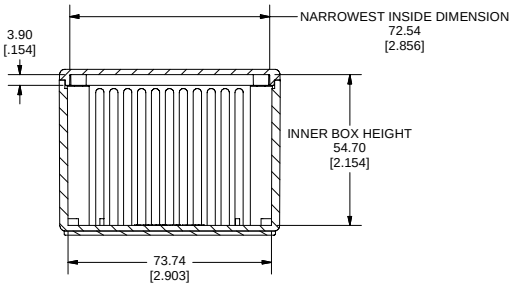

SECTION C-C

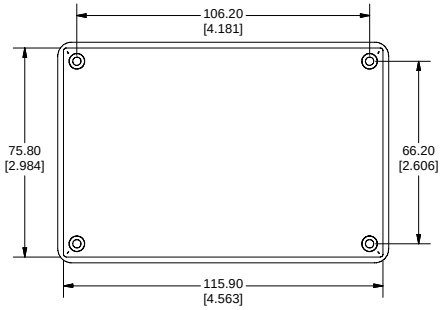

BOTTOM OF LID

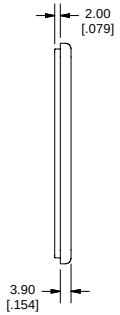

SIDE OF LID

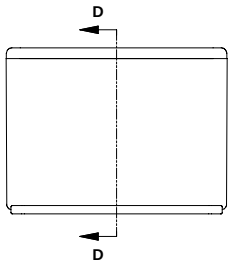

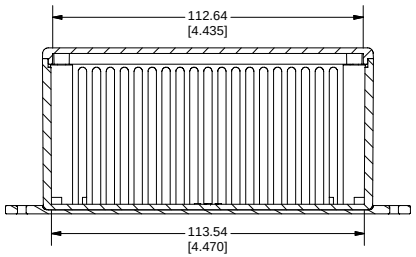

SECTION D-D

Note:
Enclosures can be Factory Modified (Milling, Drilling, Printing etc.)
Contact Factory mjm@hammondmfg.com for quotes
Solid models of this enclosure available in STEP or IGES Format.

PART NUMBERS		
1591T Flanged Box Enclosures		
Material	**Colour**	**Part Number**
FR ABS UL94 - V0	Black	1591TF2BK
	Grey	1591TF2GY
GP ABS	Black	1591TF2SBK
	Grey	1591TF2SGY
Accessories		
	Description	**Part Number**
Universal Use	PC Board Card Adapters	See Accessories Section
	Clear Lids - clear, flame retardant polycarbonate - Lid ONLY	1591TC
FR ABS	Replacement Screws, Flat Head Phillips Nickel Plated Pkg of 100	1591MS100 1591MS100BK (Black)
GP ABS	Self Tapping Pkg of 100	1591TS100 1591TS100BK (Black)
Recomended Torque on Fasteners (no lubrication)		
	M3 - 0.5 x 10mm Screws	30-40 cN*m
	#4 x 0.5 Screws	30-40 cN*m

HAMMOND MANUFACTURING™

1591TF

www.hammondmfg.com