REVISIONS					
REV.	ECN NO.	LOCATION	DESCRIPTION	DATE	DESIGN
A0	N/A		INITIAL RELEASE	/	/
A1	N/A		图面升级整理图面	2025.05.22	阿树

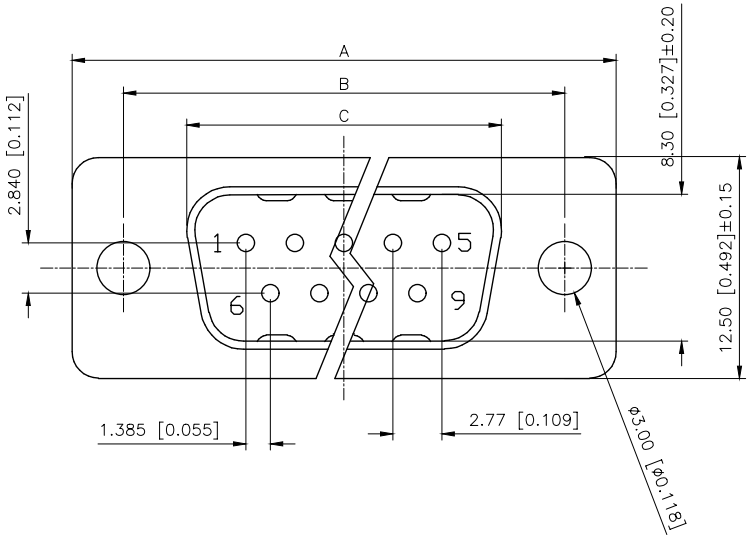

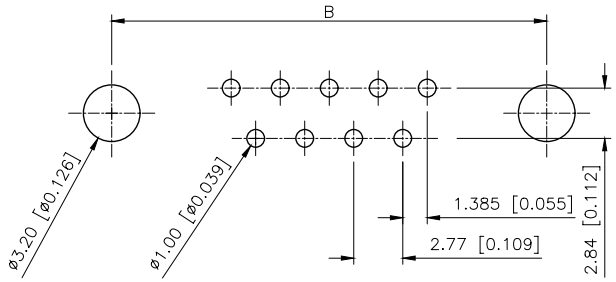

P.C.B LAYOUT

Specifications:
规格：
1.Voltage rating:250VAC/DC
额定电压：250V AC/DC
2.Current rating:3A(T) / 5A(C) AC/DC
额定电流：3A(T) / 5A(C) AC/DC
3.Withstanding voltage:500V AC/minute
耐受电压：≥500V AC/分钟
4.Temperature range: −55℃−+105℃
温度范围：−55℃−+105℃
5.Insulation resistance:1000MΩMIN
绝缘电阻：≥1000MΩ
6.Contact resistance:30mΩMax
接触电阻：≥30mΩ
Materiai:
材料：
7.Rubber core:PBT UL94V−0
胶芯：PBT UL94V−0
8.The iron shell:SPCC Nivkel Plating/Tin Plating/Gold Plating
铁壳：SPCC,镀镍/镀锡/镀金
B、成品不能有弯针，R角不一致等不良。

PART NO.:

X02 37 W T 7 BL 5
① ② ③ ④ ⑤ ⑥ ⑦

①Series NO.
②Row No.Pin No.XX−09;15;25;37
③Welding Board Angle :W−Male
④T：Tradutional C：Car−pin
⑤Planting Categotry: 1:1U' 2:2U' 3:3U' 4:5U' 5:15U' 6:30U
⑥Color:B−BLACK W−White BL−Blue
⑦1:TYPE−1; 2:TYPE−2; 5:TYPE−5; 7:TYPE−7

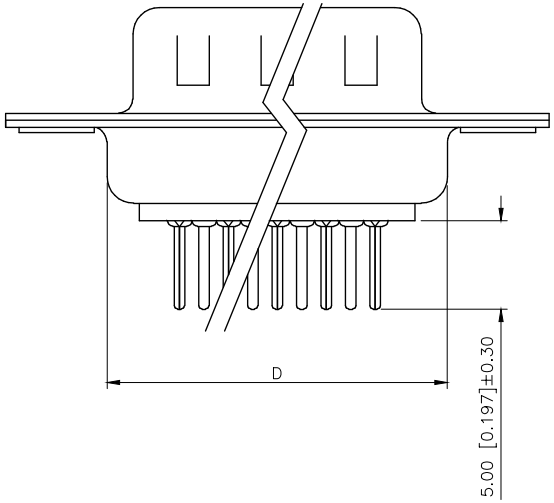

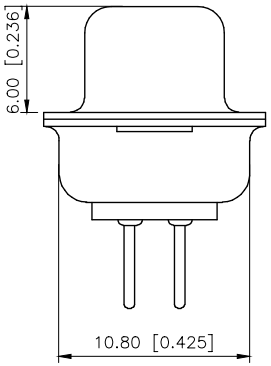

NUMBER OF POSITIONS	DIMENSION			
	A±0.25	B±0.13	C±0.38	D±0.25
9	30.80	24.99	18.00	19.28
15	39.20	33.32	26.50	27.51
25	53.05	47.04	40.00	41.28
37	69.40	63.50	56.60	57.71

铆合方式	TYPE-1:铆合	TYPE-2:前铆实心螺母	TYPE-7:后铆鱼叉	TYPE-5:铆鱼叉锁螺丝
图示	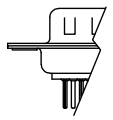	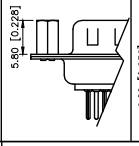	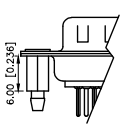	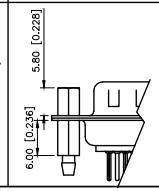

AuGLAR	±5°
X.	±0.40
X.x	±0.30
X.xx	±0.20
X.xxx	±0.15
UNSPECIFIED TOLERAuCES	

XKB 星创 Connection

DESIGN	阿树	VIEW:	MODEL TYPE: D−SUB
CHECKED		UNIT: mm/in	PART NO.: X0237WT7BL5
APPROVED		SIZE: A4	DWG NO.: X−X0237WT7BL5

XKB INDUSTRIAL PRECISION CO.,LIMITED

SCALE	PAGE	REVISION
N/A	1/1	A1