REVISIONS					
REV.	ECN NO.	LOCATION	DESCRIPTION	DATE	DESIGN
A0	N/A		INITIAL RELEASE	/	/
A1	N/A	A1 X5	脚位序号修正，图面升级整理图面	2025.05.29	阿树

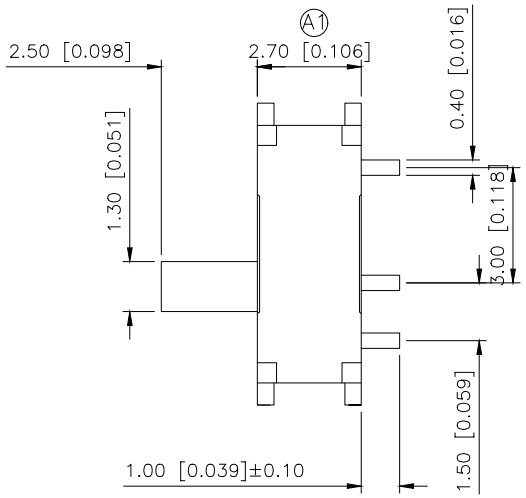

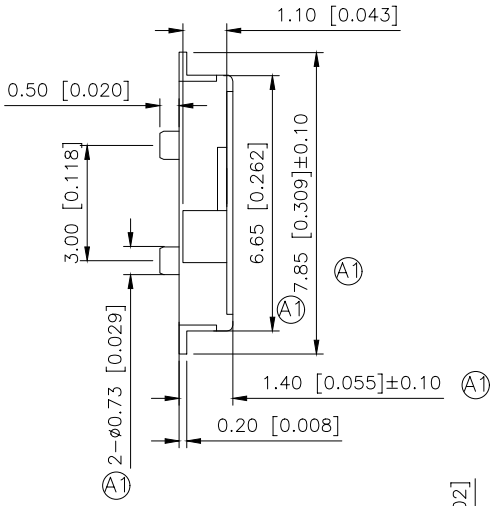

PAPT NO	L
SK-3296S-01-L1	1.5
SK-3296S-01-L2	1.5
SK-3296S-01-L3	2.5

耐电压 Rate voltage current	250V AC1mA
绝缘电阻 Insulted resistance	100MΩ min(DC 250V)
接触电阻 Contact resistance	100mΩ min(DC 100V)
使用温度 Temperature range	-25℃~+70℃
寿命 life	10,000 cycles
操作力度： Operating force	250±100gf

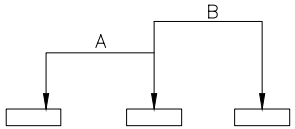

CIRCUIT DIAGRAM

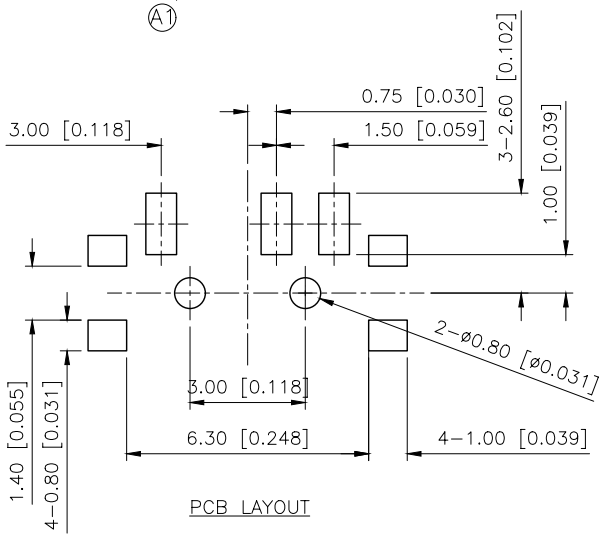

PCB LAYOUT

ITEM	PAPT NAME	QTY	MATERIAL	PLATED/COLOR
5	Shrapnel	1	Sus	Grey
4	Contact spring	1	Beryllium bronze	silvery white
3	Cover	1	Brass	silvery white
2	Base	1	LCP	Ag Plated-Black
1	Push handle	1	PA46	Black/White

AuGLAR	±5°
X.	±0.40
X.x	±0.30
X.xx	±0.20
X.xxx	±0.15
UNSPECIFIED TOLERAuCES	

XKB Connection 星坤

DESIGN	阿树	VIEW:	MODEL TYPE: SLIDE SWITCH
CHECKED		UNIT: mm/in	PART NO.: SK-3296S-01-L2
APPROVED		SIZE: A4	DWG NO.: X-SK-3296S-01-L2

XKB INDUSTRIAL PRECISION CO.,LIMITED

SCALE	PAGE	REVISION
N/A	1/1	A1