REVISIONS					
REV.	ECN NO.	LOCATION	DESCRIPTION	DATE	DESIGN
A0	N/A		INITIAL RELEASE	/	/
A1	N/A		图面升级整理图面	2025.06.25	阿树

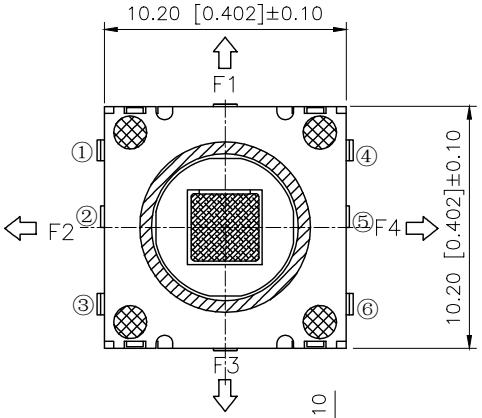

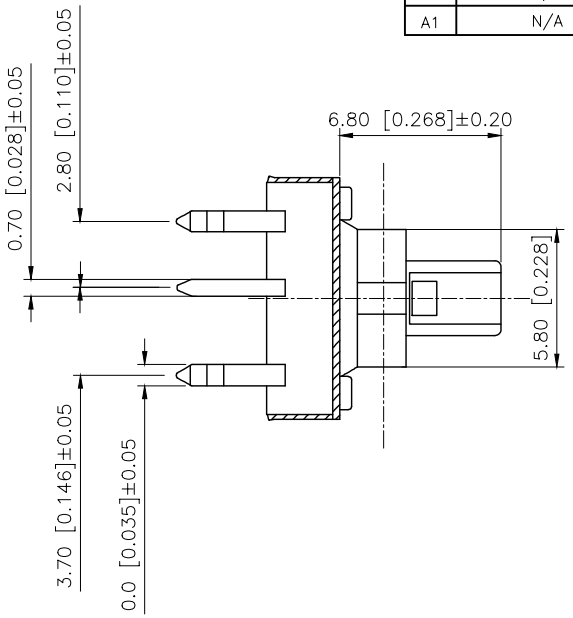

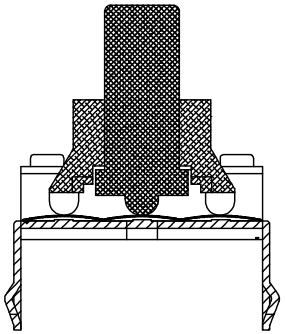

Technical parameter	
Rated load:	0.1A DC12V
Insulation resistance:	100MΩ min(DC100V)
Compressive strength:	AC100V(50/60Hz foy 1minute)
life:	50,000 cycles
Operating temperature:	−10°C~+60°C
Operating strength:	4−150±50gf
	1−250±50gf

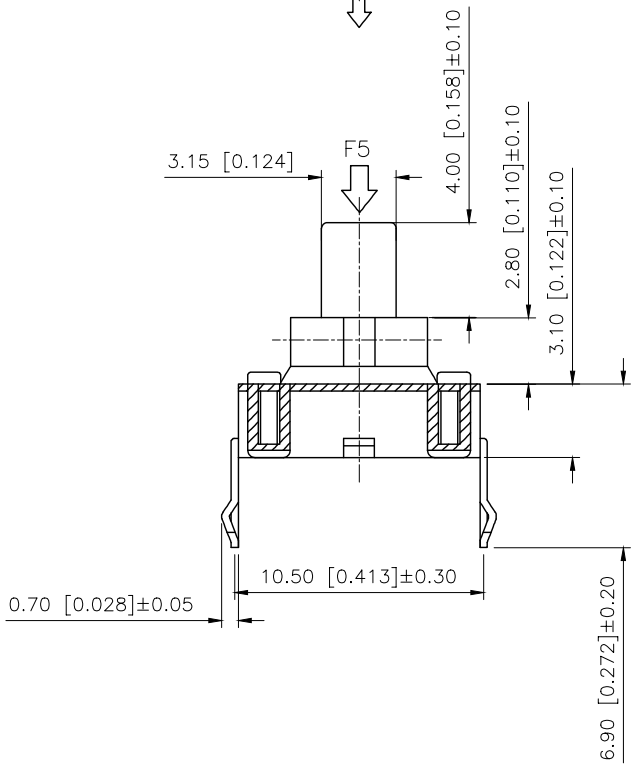

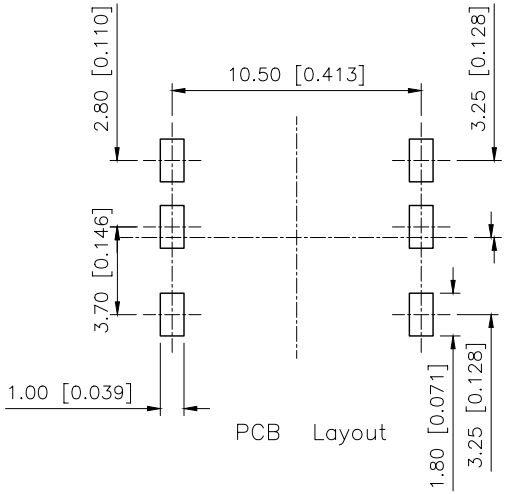

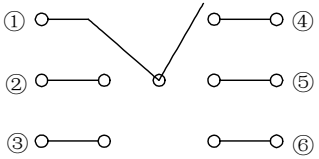

	1	2	3	4	5	6
F1	○			○		
F2	○	○				
F3	○					○
F4	○				○	
F5	○		○			

ITEM	PAPT NAMF	QTY	MATERIAL	FINISHING
⑥	Contact	5	F.ag/Brass	Plating silver
⑤	Terminal	6	Brass(0.15t)	Plating silver
④	Base	1	Lcp	
③	Spring	1	Sus	
②	Axle sleeve	1	Lcp	
①	Knob	1	PA66	

AuGLAR	±5°
X.	±0.40
X.x	±0.30
X.xx	±0.20
X.xxx	±0.15
UNSPECIFIED TOLERAuCES	

XKB Connection 星坤

DESIGN	阿树	VIEW:	MODEL TYPE: MULTI−FUNCTIONAL SWITCH
CHECKED		UNIT: mm/in	PART NO.: TM−2028
APPROVED		SIZE: A4	DWG NO.: TM−2028

XKB INDUSTRIAL PRECISION CO.,LIMITED

SCALE	PAGE	REVISION
N/A	1/1	TM−2028

www.helloxkb.com www.helloxkb.cn www.xk−dg.cn