Downloaded from Arrow.com.

Copyright FCI.

FCIconnect.com

PRODUCT NUMBER
20020731-XXXXXXXLF

20020731- □ □ □ □ □ 0 □ L F

PITCH

Y: 15.0 mm

POLES

02: 2 POLES
03: 3 POLES
04: 4 POLES

10: 10 POLES

LF : DENOTED RoHS COMPATIBLE

1 : STANDARD PRODUCT W/ BOX PACKING

SCREW CODE

CODE	SCREW TYPE		AVAILABILTY
A	-/+		ON REQUEST ONLY
B	-		STANDARD

HOUSING CODE

CODE	COLOR	AVAILABILTY
1	GREEN(RAL 6018/T)	STANDARD
2	BLACK	ON REQUEST ONLY
3	GREY(RAL 7004/P)	ON REQUEST ONLY
4	BLUE(RAL 5015/A)	ON REQUEST ONLY

PROPERTY TABLE			
FCI SERIES NAME			40-1500
PITCH (mm)			15.0
VOLTAGE RATING (VAC)			600
CURRENT RATING (A)			125
APPLICABLE WIRE RANGE (AWG)		1-WIRE	2~20
		2-WIRE	10
WIRE CROSS SECTION (mm^2)	SOLID	1-WIRE	35
		2-WIRE	6.0
	STRANDED	1-WIRE	25
		2-WIRE	6.0
OPENING CONTACT HOUSING(mm^2)			8.1x8.4
WIRE STRIP LENGTH(mm)			15~18
TORQUE +/-10% (N-M/Lb-in)			4.12/36.5
SCREW			M5.0x0.8
WITHSTANDING VOLTAGE (kV)			2.2
OPERATING TEMP. (°C)			-40~+115
SOLDERING TEMP. (°C)			250±10 (5 sec.)
POLES AVAILABLE			02~10
SAFETY CERTIFICATE			cFAus

NOTES:

1.MATERIAL:
1-1 HOUSIN: THERMOPLASTIC RESIN, UL94V-0 RATED.
1-2 SCREW: STEEL, ZINC PLATED.
1-3 CLAMP: COPPER ALLOY, NICKEL PLATED.
1-1 TERMINAL: COPPER ALLOY TIN PLATED.

2. PRODUCT SPECIFICATION REFER TO FCI GS-12-625.
3. PRODUCT PACKING SPECIFICATION REFER TO FCI GS-14-1394.
4. FCI, SAFETY CERTIFICATE LOGO AND SERIES NAME TO BE SHOWN ON PRODUCT SURFACE.
5. THE PRODUCTS WHERE THE PART NUMBER END IN "LF" MEET THE EUROPEAN UNION DIRECTIVE AND OTHER COUNTRY REGULATIONS AS DESCRIBED IN GS-22-008.
6. RECOMENDED SOLDERING PROCESS BY WAVE SOLDER.

mat'l. code				surface	tolerance	projection	product family	
				ASME Y14.5	ASME Y14.5		TERMINAL BLOCK	
ltr	ecn no	dr	date	tolerances unless otherwise specified			title	
A	T10-0138	WL	083110	angles	linear X.±0.5	MM [INCH]	TERMINAL BLOCK FIXED POWER PLUG, MIDDLE CONTACT	
B	T10-0172	WL	102010		X.X±0.3			
C	T-005202	WL	081911	X°±1°	X.XX±0.1	scale		
D	T-010814	LS	031912	dr	WENDY CHEN	082310	dwg no 20020731	sheet 1 of 2 size A4
				engr	JASON HSU	082310		
				chr	GARY HSIEH	082310		
				appd	JOSEPH HSIA	082310	type	CUSTOMER Drawing

sheet index	revision sheet	D 1	D 2

form: A4mmXLc

PDS: Rev :D STATUS:Released Printed: May 10, 2012

Downloaded from Arrow.com.

Copyright FCI.

FCIconnect.com

PRODUCT NUMBER	SERIES NAME	PITCH
20020731-YXXXXXXLF	40-1500	15.0 mm

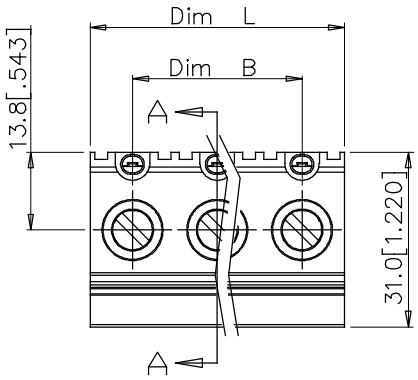

N = Number of poles
Dim L=Nx15.0[.591]
Dim B=(N-1)x15.0[.591]

Poles	Tolerance
2-3p	±0.30[.012]
4-5p	±0.50[.020]
6-10p	±0.80[.031]

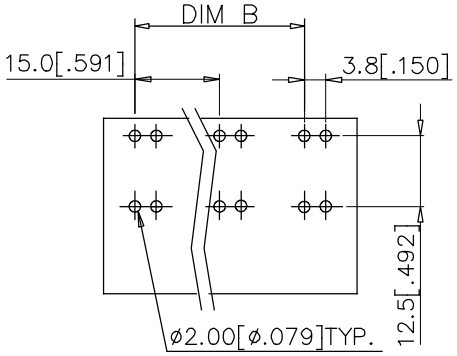

Recommended P.C.B.Layout

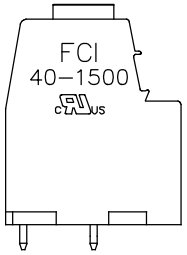

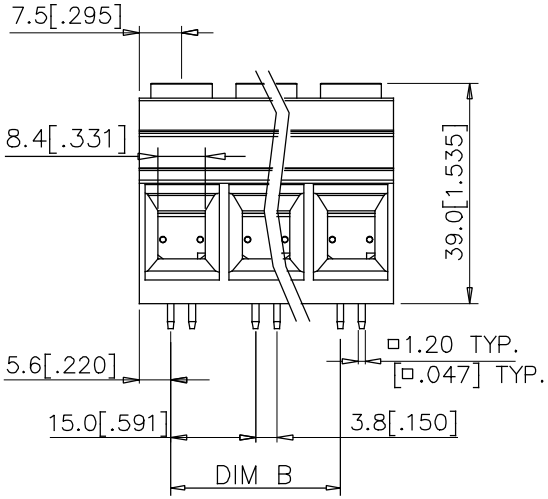

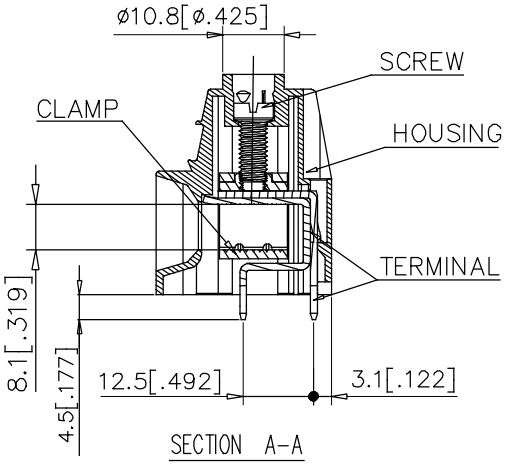

mat'l. code				surface ASME Y14.5	tolerance ASME Y14.5	projection	product family TERMINAL BLOCK
ltr	ecn no	dr	date	tolerances unless otherwise specified			title
D				angles	linear X.±0.5	MM [INCH]	TERMINAL BLOCK FIXED POWER PLUG, MIDDLE CONTACT
				X°±1°	X.X±0.3	scale	
					X.XX±0.1		
				dr	WENDY CHEN 082310		dwg no 20020731 sheet 2 of 2 size A4
				engr	JASON HSU 082310		
				chr	GARY HSIEH 082310		
				appd	JOSEPH HSIA 082310		type CUSTOMER Drawing
sheet index	revision sheet						