REVISIONS					
REV.	ECN NO.	LOCATION	DESCRIPTION	DATE	DESIGN
A0	N/A		INITIAL RELEASE	/	/
A1	N/A		图面升级整理图面	2025.05.29	阿树

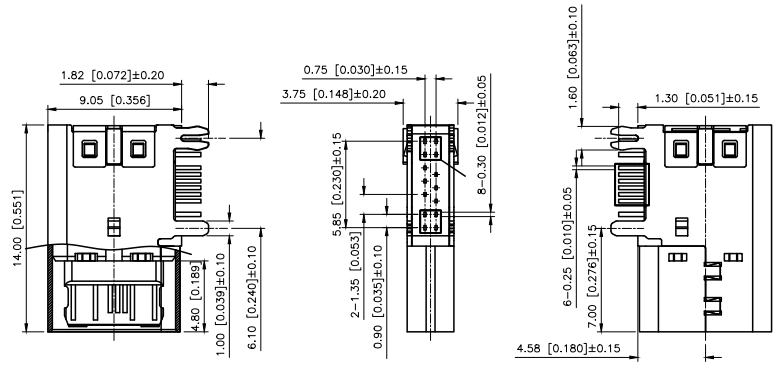

特性：
一、电气性能：EICTRICAL
1.Current rating额定电流：3.0A MAX
2.Contact resistance接触阻抗：30 MILLIOHMS MAX
3.Withstand voltage耐电压：150V AC / 1 mA MAX
4.Insulation resistance绝缘阻抗：150V DC/100 MEGA OHMS MIN
二、Mechanical properties机械性能：
1.Insertion force插入力：5-20N
2.Dial out force拨出力：8-20N
3.Service life使用寿命：10000次
三、材料：MATERIAL
1、Shell外壳：SUS304 ½H T=0.30mm
2、Cover后盖：SUS304 ½H T=0.25mm
3、Medium clips中夹片：SUS301 3/4H T=0.15mm
4、PIN：黄铜 EH T=0.15mm
5、Plastic塑胶：LCP+30%G.F黑色
四、电镀:FINISH
1.Terminal端子：Contact point gold plating 1U±20%
Pin pin soldering area gold-plated G/F
2.Shell外壳：nickel plated 50U"Min（Salt spray24H)
五、Electroplating products need to be tested for tin sticking:
the area of tin sticking reaches more than 95%.。
六、SMT reflow soldering (peak 260°C±5°C) can not blister,
Poor melting, discoloration (deformation within tolerance)
七、Temperature range工作温度：-55°C~+85°C
八、Salt spray test盐雾测试：
No rust was tested by salt spray at a concentration
of 5±1% brine for 24 hours;

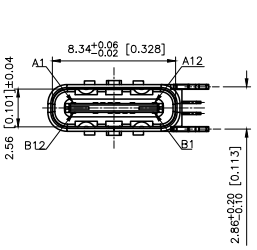

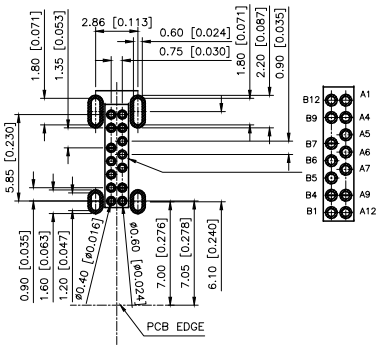

RECOMMENDED P.C.B. LAYOUT
TOLERANCE UNSPECIFIED ±0.05mm

U264-141N-4BAC10
1:AU 1U"
2:AU 3U"
5:AU
15U"
6:AU
30U"

A1	A2	A3	A4	A5	A6	A7	A8	A9	A10	A11	A12
GND			VBUS	CC1	D+	D-		VBUS			GND
GND			VBUS		D-	D+	CC2	VBUS			GND
B12	B11	B10	B9	B8	B7	B6	B5	B4	B3	B2	B1

AuGLAR	±5°
X.	±0.40
X.x	±0.30
X.xx	±0.20
X.xxx	±0.15
UNSPECIFIED TOLERAuCES	

XKB 星城 Connection
XKB INDUSTRIAL PRECISION CO.,LIMITED

DESIGN	阿树	VIEW:	MODEL TYPE: USB TYPE-C
CHECKED		UNIT: mm/in	PART NO.: U264-141N-4BAC10
APPROVED		SIZE: A4	DWG NO.: X-U264-141N-4BAC10

SCALE	PAGE	REVISION
N/A	1/2	A1

www.helloxkb.com www.helloxkb.cn www.xk-dg.cn

REVISIONS					
REV.	ECN NO.	LOCATION	DESCRIPTION	DATE	DESIGN
A0	N/A		INITIAL RELEASE	/	/
A1	N/A		图面升级整理图面	2025.05.29	阿树

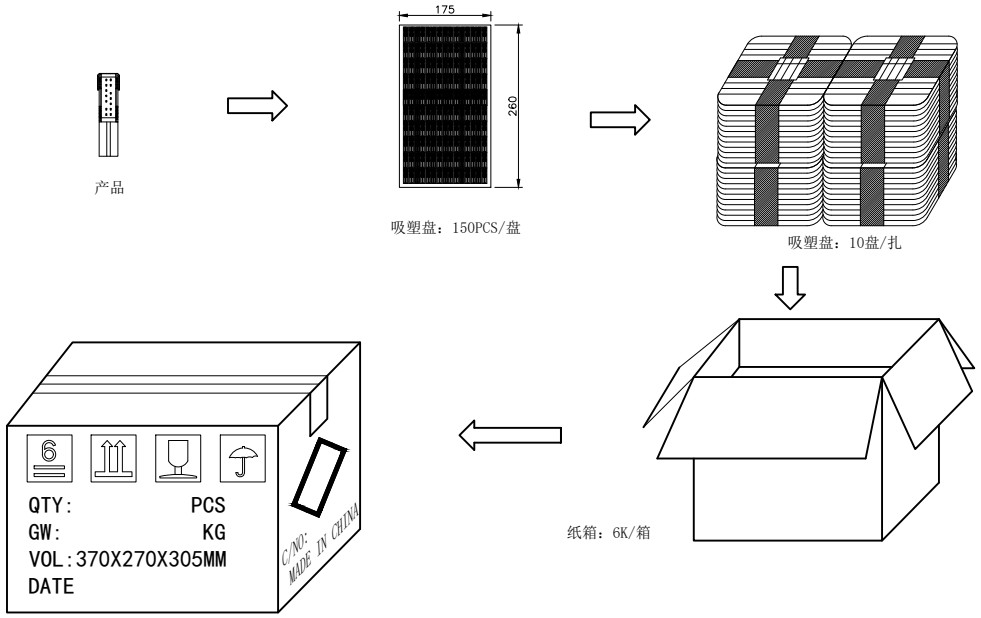

AuGLAR	±5°
X.	±0.40
X.x	±0.30
X.xx	±0.20
X.xxx	±0.15
UNSPECIFIED TOLERAuCES	

XKB 星城 Connection
XKB INDUSTRIAL PRECISION CO.,LIMITED

DESIGN	阿树	VIEW:	MODEL TYPE: USB TYPE-C
CHECKED		UNIT: mm/in	PART NO.: U264-141N-4BAC10
APPROVED		SIZE: A4	DWG NO.: X-U264-141N-4BAC10

SCALE	PAGE	REVISION
N/A	2/2	A1

www.helloxkb.com www.helloxkb.cn www.xk-dg.cn