REVISIONS					
REV.	ECN NO.	LOCATION	DESCRIPTION	DATE	DESIGN
A0	N/A		INITIAL RELEASE	/	/
A1	N/A		图面升级整理图面	2025.05.26	阿树

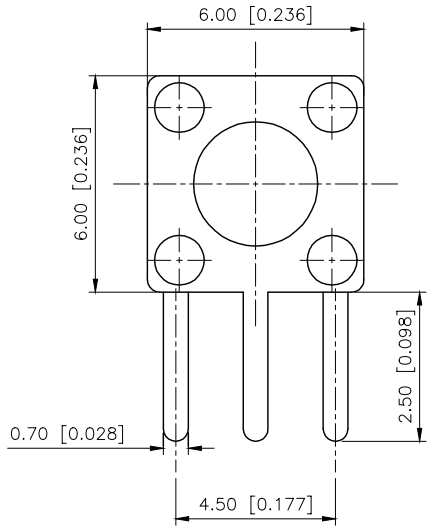

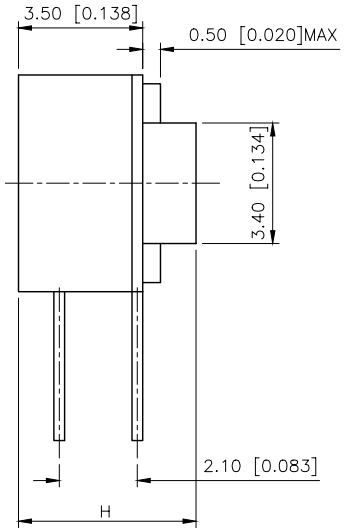

SPECIFICATION
Contact rating: 50mA,12V DC
Contact Resistance: 100mΩ max
Dielectric Strength: 250V AC/1minute
Travel: 0.25mm
Operating Temp: −30℃~+85℃
Storage Temp: −30℃~+80℃

Code−x	H
A	4.30
B	4.50
C	5.00
D	5.50
E	6.00
F	6.50
G	7.00
H	7.50
I	8.00
J	8.50
K	9.00
L	9.50
M	10.00
N	10.50

Code−x	H
O	11.00
P	11.50
Q	12.00
R	12.50
S	13.00
T	13.50
U	14.00
V	15.00
W	15.50
X	16.00
Y	16.50
Z	17.00

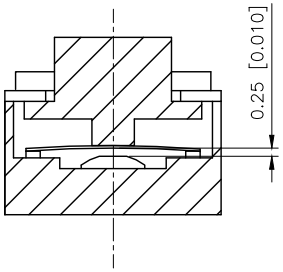

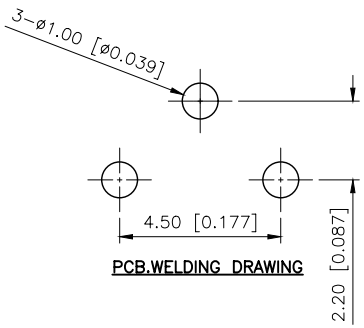

PCB.WELDING DRAWING

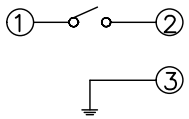

CIRCUIT DIAGRAM

PAPT NO	TC−1102DE−B−C
Operating Force	A:100gf B:160gf C:260gf
Height	Code−X

ITEM	PAPT NAMF	QTY	MATERIAL	FINISHING
⑤	Terminal	3	Brass（0.30t）	Ag Plated
④	Contact	1	F.ag/SUS	
③	Base	1	PPA	
②	Cover	1	Brass	Tin plated
①	Keystake	1	PPA	

AuGLAR	±5°
X.	±0.40
X.x	±0.30
X.xx	±0.20
X.xxx	±0.15
UNSPECIFIED TOLERAuCES	

XKB Connection 星坤

DESIGN	阿树	VIEW:	MODEL TYPE: TACT SWITCH
CHECKED		UNIT: mm/in	PART NO.: TC−1102DE−B−C
APPROVED		SIZE: A4	DWG NO.: TC−1102DE−B−C

XKB INDUSTRIAL PRECISION CO.,LIMITED

SCALE	PAGE	REVISION
N/A	1/1	A1

www.helloxkb.com www.helloxkb.cn www.xk−dg.cn