REVISIONS					
REV.	ECN NO.	LOCATION	DESCRIPTION	DATE	DESIGN
A0	N/A		INITIAL RELEASE	/	/
A1	N/A		图面升级整理图面	2025.05.28	阿树

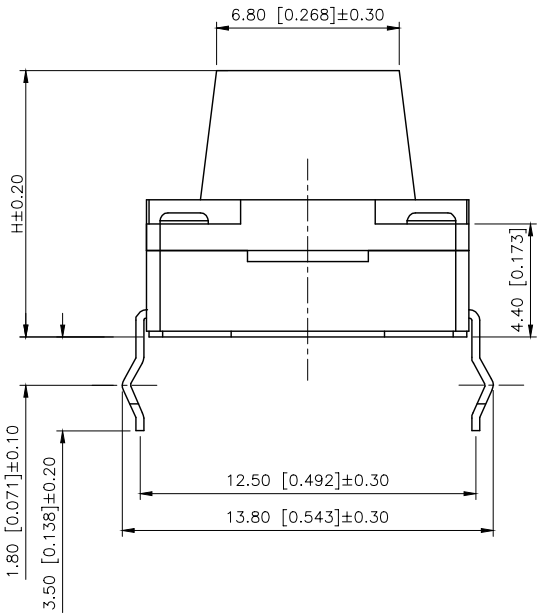

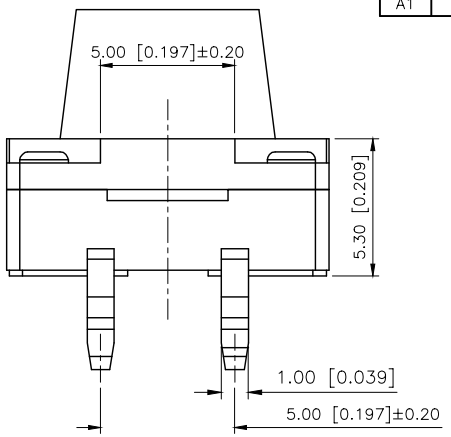

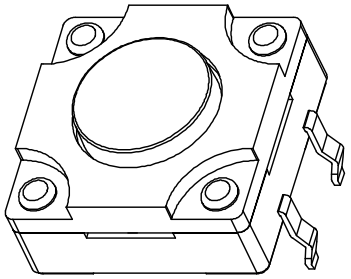

Code-x	H	Code-x	H
E	6.00	Q	12.00
F	6.50	R	12.50
G	7.00	S	13.00
H	7.50	T	13.50
I	8.00	U	14.00
J	8.50	V	14.50
K	9.00	W	15.00
L	9.50	X	15.50
M	10.00	Y	16.00
N	10.50	Z	17.00
O	11.00	18	18.00
P	11.50	19	19.00

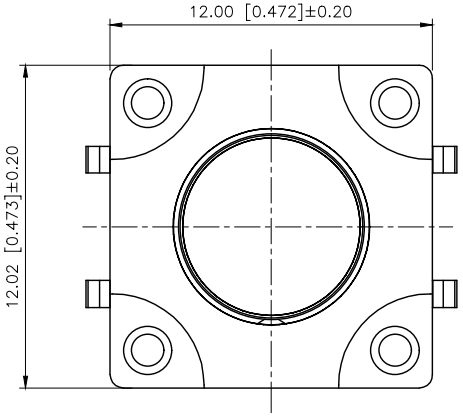

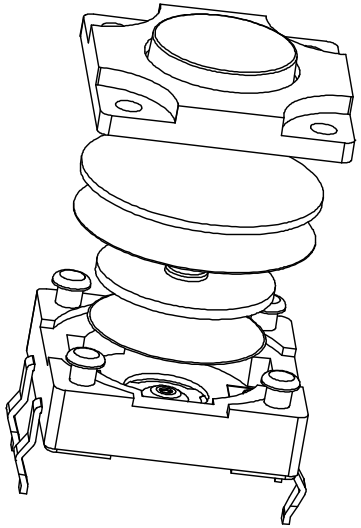

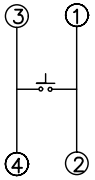

SCHEMATIC

SPECIFICATION
Contact Rating: 50mA,12V DC
Contact Resistance: 100mΩ max
Insulation Resistance: 100MΩ min.500V DC
Dielectric Strength: 250V AC/1minute
Travel: 0.25mm
Operating Temp: −25℃~+80℃
Storage Temp: −30℃~+80℃

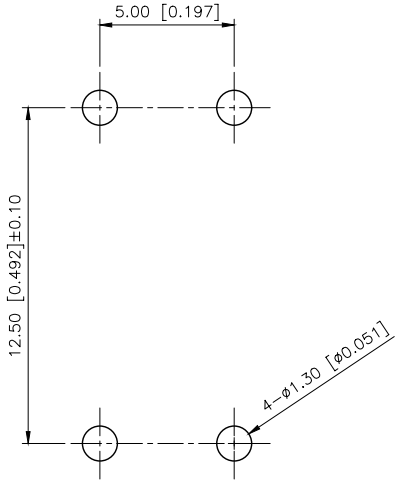

P.C.B LAYOUT

PAPT NO	TC-FS1212D-C-J
Operating Force	A:100gf B:160gf C:260gf
Height	Code-X

ITEM	PAPT NAMF	QTY	MATERIAL	FINISHING
⑤	Terminal	4	Brass（0.30t）	Plating silvering
④	Contact	1	F.ag/SUS	Natural
③	Base	1	Pa46	
②	Cover	1	Pa46	
①	Keystake	1	Pa46	

AuGLAR	±5°
X.	±0.40
X.x	±0.30
X.xx	±0.20
X.xxx	±0.15
UNSPECIFIED TOLERAuCES	

XKB Connection 星坤

DESIGN	阿树	VIEW:	MODEL TYPE: TACT SWITCH
CHECKED		UNIT: mm/in	PART NO.: TC-FS1212D-C-J
APPROVED		SIZE: A4	DWG NO.: TC-FS1212D-C-J

XKB INDUSTRIAL PRECISION CO.,LIMITED

SCALE	PAGE	REVISION
N/A	1/1	A1