REVISIONS					
REV.	ECN NO.	LOCATION	DESCRIPTION	DATE	DESIGN
A1	N/A			2024.11.19	
A2	ECN-P-2025122506	A2 X2		2025.12.25	

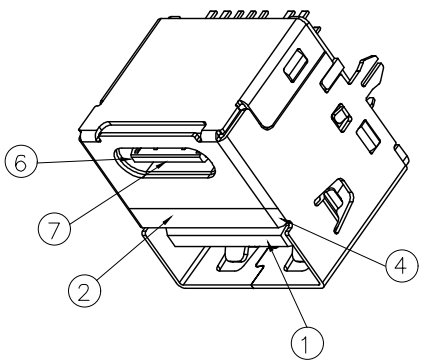

3D VIEW

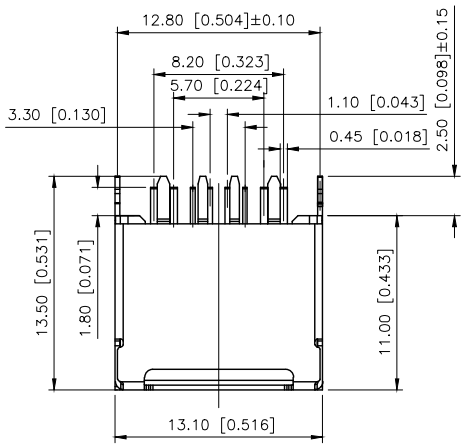

Specifications:

1. Mechanical:
   - 1.1 Connector Insertion forces: 5~20N
   - 1.2 Connector unmating forces: 5~20N
   - 1.3 Durability: 10000 cycles Min
2. Electrical:
   - 2.1 Current rating:5.0A MAX
   - 2.2 Rated voltage 30V MAX
   - 2.3 Withstanding voltage:100V AC/minute
   - 2.4 Insulation resistance:100MΩ Min
   - 2.5 Contact resistance:40mΩ/pin Max
   - 50mΩ Max after test
3. Ambient temperature
   - 3.1 Temperature range:-30 to+85
   - 3.2 Salt spray 24H.

USB31-TPYE-C-LB01T-1

01:G/F — PACKAGE TYPE

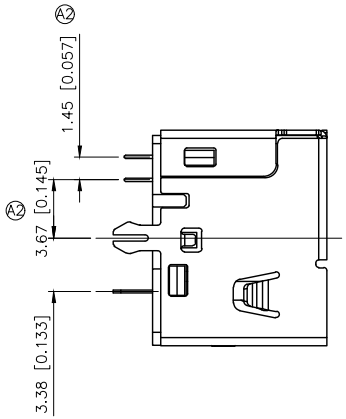

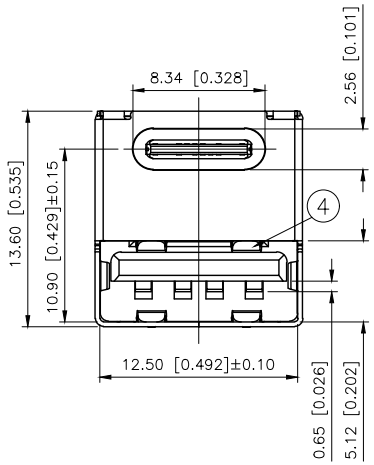

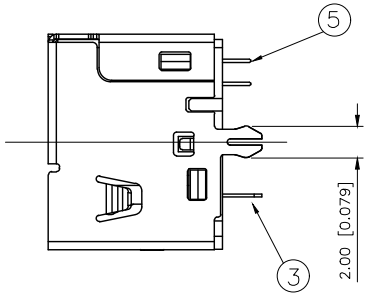

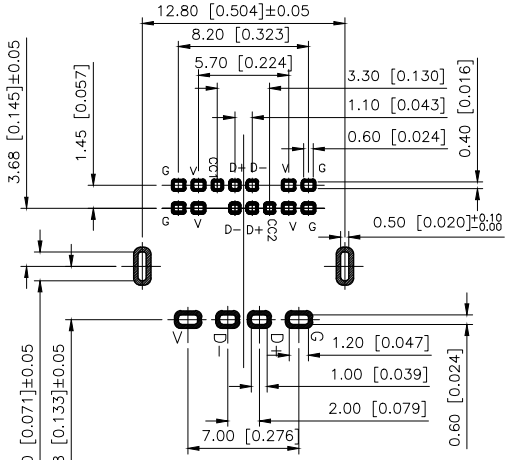

RECOMMENDED P.C.B. LAYOUT
TOLERANCE:±0.05mm

NO.	DESCRIPTION	MATERIAL	COLOR	REMARK
7	TYPE C Moding	LCP+30GF	BLACK	UL 94V-0
6	CENTER PIECE	SUS201-H	——	
5	TYPE C TERMINAL	C2680-H	——	G/F Tin Ni
4	CLIP	SUS201-1/4H	——	
3	USB TERMINAL	C5191-H	——	G/F Tin Ni
2	SHELL	SPCC	——	Ni Plated
1	HOUSING	LCP+30GF	BLACK	UL 94V-0

AuGLAR	±5°
X.	±0.40
X.x	±0.30
X.xx	±0.20
X.xxx	±0.15
UNSPECIFIED TOLERAuCES	

FRONT VIEW
PIN DEFINITION

A12	A11	A10	A9	A8	A7	A6	A5	A4	A3	A2	A1
GND			VBus		D-	D+	CC	VBus			GND
GND			VBus	Vconn				VBus			GND
B1	B2	B3	B4	B5	B6	B7	B8	B9	B10	B11	B12

XKB Connection

DESIGN		VIEW:	MODEL TYPE: USB 2.0
CHECKED		UNIT: mm/in	PART NO.: U241-04XN-1XR85-X
APPROVED		SIZE: A4	DWG NO.:

XKB INDUSTRIAL PRECISION CO.,LIMITED

SCALE	PAGE	REVISION
N/A	1/1	A2